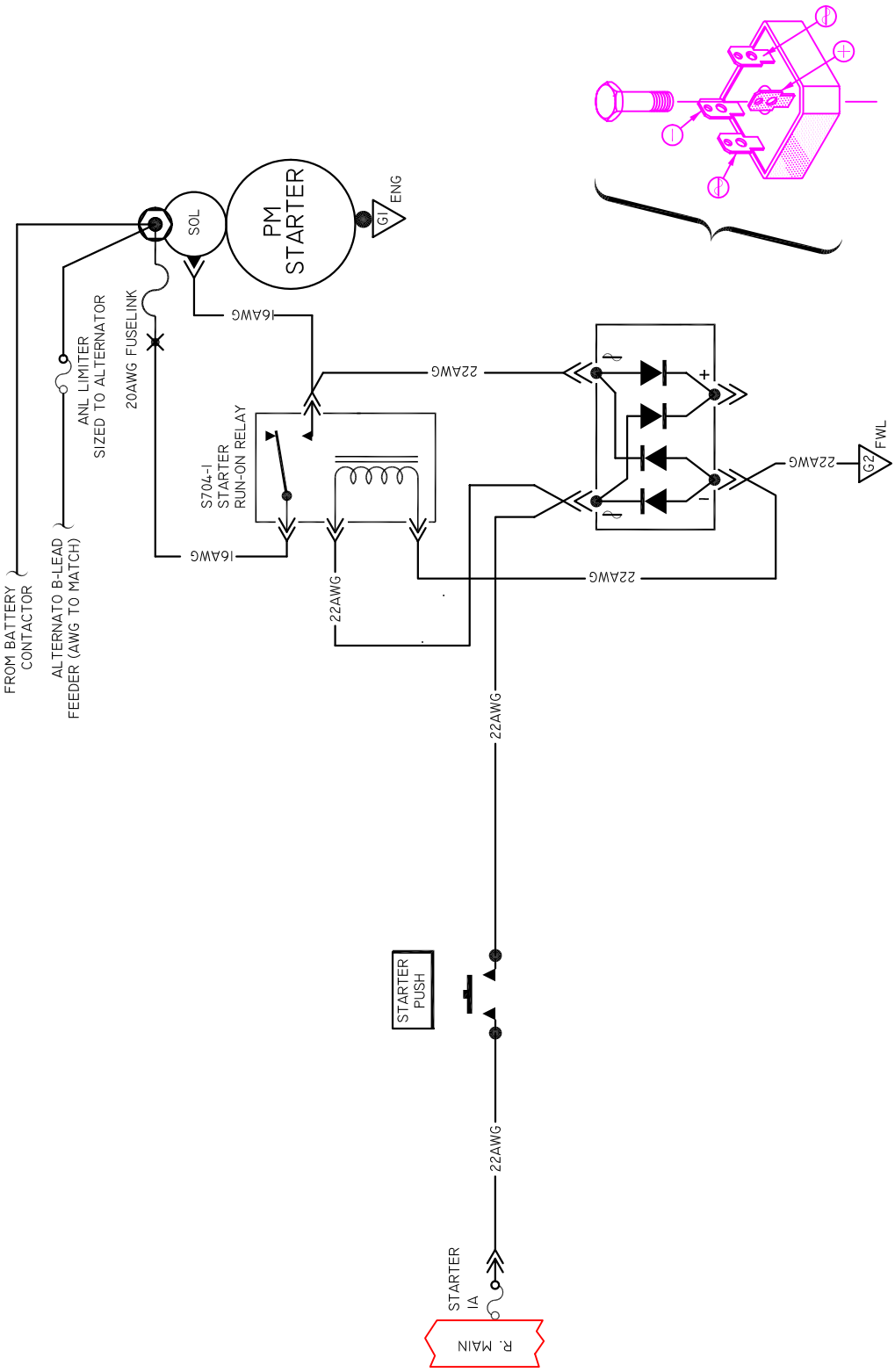

TITLE	PAGE
STARTER (WITH) RUN-ON RELAY	