AlliedSignal

ELECTRONIC AND AVIONICS SYSTEMS

# MAINTENANCE MANUAL

BENDIX/KING®

# KT 76A/78A

## ATCRBS TRANSPONDER

MANUAL NUMBER 006-05143-0007

REVISION 7, MARCH, 1999

WARNING

Prior to export of this document, review for export license requirement is needed.

## Comment Card

**Part Number/Revision:** _____

**Name:** _____

**Company:** _____

**Street Address:** _____

**City, State/Zip or Country:** _____

**Comments:** _____

_____

_____

_____

_____

## Subscription Card

Please complete and return this card to AlliedSignal, Inc., Technical Publications Department, to receive revisions for this publication.

**Publication Title:** _____

**Company:** _____

**Attn:** _____

**Street Address:** _____

**City, State:** _____

**Zip Code:** _____

**Country:** _____

NO POSTAGE
NECESSARY IF
MAILED IN THE
UNITED STATES

# BUSINESS REPLY MAIL

First Class Mail, Permit No. 121, Olathe, KS

POSTAGE WILL BE PAID BY THE ADDRESSEE

AlliedSignal, Inc.
Electronic and Avionics Systems
Attn:Technical Publications
P.O. Box 1950
Olathe, Kansas 66051-9930

NO POSTAGE
NECESSARY IF
MAILED IN THE
UNITED STATES

BUSINESS REPLY MAIL

First Class Mail, Permit No. 121, Olathe, KS

POSTAGE WILL BE PAID BY THE ADDRESSEE

AlliedSignal, Inc.
Electronic and Avionics Systems
Attn:Technical Publications
P.O. Box 1950
Olathe, Kansas 66051-9930

REVISION HISTORY AND INSTRUCTIONS

MANUAL: KT 76A Maintenance Manual

REVISION: 7, March 1999

PART NUMBER: 006-05143-0007

Add, delete, or replace pages as indicated below and retain all tabs and dividers. Insert this page immediately behind the title page as a record of revisions.

| ITEM | ACTION |
|---|---|
| Title Page | Remove and Replace |
| Title Page (hard cover) | Remove and Replace |
| Revision History | Insert Behind Title Page |
| KT 76A MM Table of Contents | Remove and Replace |
| KT 76A MM Section 5, Pages 1-10 | Remove and Replace |
| KT 76A MM Section 6, All | Remove and Replace |

REVISION HISTORY AND INSTRUCTIONS

MANUAL: KT 76A/78A Maintenance Manual

REVISION: 6, November, 1996

PART NUMBER: 006-05143-0006

Add, delete, or replace pages as indicated below and retain all tabs and dividers. Insert this page immediately behind the title page as a record of revisions.

| ITEM | ACTION |
|---|---|
| KT 76A/78A MM Title Page | Remove and Replace |
| KT 76A/78A MM Revision History | Insert Behind Title Page |
| KT 76A/78A IM | Remove and Replace |
| KT 76A/78A MM | Remove and Replace |

REVISION HISTORY AND INSTRUCTIONS

| | |
|---|---|
| MANUAL | KT 76A/78A Maintenance Manual |
| REVISION | 5, FEBRUARY |
| PART NUMBER | 006-05143-0005 |

Add, delete, or replace pages as indicated below and retain all tabs and dividers. Insert this page immediately behind the title page as a record of revisions. This revision level of this manual consists of the following individual publications:

| PAGE | ACTION |
|---|---|

This is a complete manual revision. This revision supersedes all previous revision manuals.

INSTALLATION MANUAL
SECTIONS I, II AND III

Sections I, II, and III have been deleted from the Maintenance-Overhaul Manual format. The Installation Manual, which covers the same information, should be placed behind this tab to complete your technical library for each unit. It is recommended that the entire Installation Manual be removed and replaced when a revision is issued. The revision number and date of revision are printed on each Installation Manual cover page

AlliedSignal

ELECTRONIC AND AVIONICS SYSTEMS

# INSTALLATION MANUAL

BENDIX/KING®

# KT 76A/78A

## ATCRBS TRANSPONDER

MANUAL NUMBER 006-00143-0006

REVISION 6, NOVEMBER 1996

WARNING

INFORMATION SUBJECT TO THE EXPORT CONTROL LAWS. THIS DOCUMENT, WHICH INCLUDES ANY ATTACHMENTS AND EXHIBITS HERETO, CONTAINS INFORMATION SUBJECT TO INTERNATIONAL TRAFFIC IN ARMS REGULATION (ITAR) OR EXPORT ADMINISTRATION REGULATION (EAR) OF 1979, WHICH MAY NOT BE EXPORTED, RELEASED OR DISCLOSED TO FOREIGN NATIONALS INSIDE OR OUTSIDE THE U.S. WITHOUT FIRST OBTAINING AN EXPORT LICENSE. VIOLATORS OF ITAR OR EAR MAY BE SUBJECT TO A PENALTY OF 10 YEARS IMPRISONMENT AND A FINE OF $1,000,000 UNDER 22 U.S.C. 2778 OR SECTION 2410 OF THE EXPORT ADMINISTRATION ACT OF 1979. INCLUDE THIS NOTICE WITH ANY REPRODUCED PORTION OF THIS DOCUMENT.

## COPYRIGHT NOTICE

## SECTION I
## GENERAL INFORMATION



## SECTION II
## INSTALLATION



## SECTION III
## OPERATION

## LIST OF ILLUSTRATIONS

# SECTION I
# GENERAL INFORMATION

## 1.1 INTRODUCTION

This manual contains information relative to the physical, mechanical, and electrical characteristics of the AlliedSignal KT 76A/78A. Information relative to the maintenance, alignment and procurement of replacement parts may be found in the KT 76A/78A Maintenance/Overhaul Manual.

## 1.2 GENERAL DESCRIPTION

The KT 76A/78A Transponders are radar beacon equipment designed to fulfill the role of the airborne beacon under the requirements of the Air Traffic Control Radar Beacon System (ATCRBS). The KT 76A/78A Transponders are capable of locating the user through the air traffic controller. Range and azimuth are established by the return from the transponder's pulsed transmitter in reply to a routine interrogation from the ground radar site. The transponder reply is a set of pulses, selected in number, and positioned in time, one with respect to the other (not entirely unlike telegraphy). Information is conveyed to the ground in this manner. An identity code number, selected at the front panel by the pilot is transmitted as a Mode A reply. Mode C, altitude reporting, is an additional capability designed into the transponder. However, in order to convey altitude information, the transponder must be used in conjunction with a reporting altimeter and operated in "ALT" mode. An additional feature of the transponder and beacon system is the S.P.I. (Special Pulse Identification). After pressing the ident button the transponder, when interrogated, will reply with a special pulse that will cause the associated pip on the controller's display to "bloom" effecting immediate recognition.

## 1.3 TECHNICAL CHARACTERISTICS

| SPECIFICATION | CHARACTERISTIC |
|---|---|
| TSO COMPLIANCE: | C74b |
| TSO CATEGORY: | KT 76A -DAPBBBXXXXXX Class I<br>KT 78A -DAPBBBXXXXXX Class II |
| APPLICABLE DOCUMENTS: | TSO C74b RTCA DO-138 |
| TEMPERATURE RANGE: | -15 @C to +55 @C for continuous operation |
| HUMIDITY RANGE: | Up to 95% at +50 @C (+122 @F) for 12 hours |
| WEIGHT: | See Figure 2-4 |
| INSTALLATION SPACE: | See Figure 2-4 |
| POWER REQUIREMENTS: | 14 V, 1.8 A Max., 1.1 A standby |
| ALTITUDE: | KT 76A tested up to 35000 feet, which exceeds TSO requirements. KT78A up to 15,000 feet. |
| TRANSMITTER FREQUENCY: | 1090 MHz #.3 MHz (with a coax cable SWR of 1.2 to 1 or less) |
| TRANSMITTER POWER: | KT 76A - 200 W peak minimum<br>KT 78A - 113 W peak minimum |
| COOLING: | Not required, but recommended |

| SPECIFICATION | CHARACTERISTIC |
|---|---|
| RECEIVER FREQUENCY: | 1030 MHz |
| RECEIVER SENSITIVITY: | -74 dBm nominal<br>-72 dBm minimum for 90% reply |
| MODE A CAPABILITY: | 4096 identity codes plus SPI pulse |
| MODE C CAPABILITY: | Accepts ARINC altitude digitizer output, reporting in 100 foot increments from -1000 feet up to 63,000 feet. |
| SIDE LOBE SUPPRESSION: | 3 pulse |
| SUPPRESSION IN: | Accepts ARINC Bilateral<br>Ex: (LO $\leq$ 0.5 V, High $\geq$ 18V)<br>KN 63/KDM 706/KTU 709<br><br>AlliedSignal Unilateral<br>Ex: (LO $\leq$ 0.5 V, High $\geq$ 8V<br>KN 62A/KN 64/KNS 80 |

## 1.4 UNITS AND ACCESSORIES SUPPLIED

A. AlliedSignal KT 76A Transponder P/N 066-1062-00; P/N 066-1062-02 (Blue/White lighting); or P/N 066-1062-10, Crown Series; 14 V dc or AlliedSignal KT 78A Transponder P/N 066-1062-01, 14 V dc. Mounting Tray P/N 047-03898-0002 (supplied with each unit).

B. AlliedSignal KT 76A/78A Installation Kit P/N 050-01577-0000/0001.

Parts List as follows:

| PART NUMBER | DESCRIPTION | QUANTITY | |
|---|---|---|---|
| | | -0000 | -0001 |
| 050-01577-0000 | Inst Kit KT 76A/70 | X | |
| 050-01577-0001 | Inst Kit w/out Ant | | X |
| 006-01058-0004 | RF Connector Assy | 1 | 1 |
| 030-00005-0000 | Conn BNC Coax RG 142 | 1 | 1 |
| 030-00101-0002 | Panel Mount Plug | 1 | 1 |
| 030-01094-0002 | Conn Card Edge 12/24 | 1 | 1 |
| 030-01096-0000 | Key Polarizer | 1 | 1 |
| 030-01107-0024 | Connector Term 24T | 1 | 1 |
| 071-01174-0000 | Antenna DME/XPNDR | 1 | 0 |
| 089-02013-0037 | Nut Hex #6-32 | 1 | 1 |
| 089-02353-0001 | Nut Clip #6-32 | 6 | 6 |
| 089-05903-0007 | Scr PHP #4-40 X 7/16 | 2 | 2 |

| PART NUMBER | DESCRIPTION | QUANTITY | |
|---|---|---|---|
| | | -0000 | -0001 |
| 089-05907-0006 | Scr PHP #6-32 X 3/8 | 1 | 1 |
| 089-06012-0008 | Scr PHP #6-32 X 1/2 | 6 | 6 |
| 089-08027-0030 | Washer, Flat #6 | 1 | 1 |
| 089-08094-0030 | Washer, Flat .446 | 1 | 1 |
| 089-08110-0034 | Lockwasher #6 | 1 | 1 |
| 089-08168-0002 | Washer, Wave | 1 | 1 |
| 090-00019-0007 | Retaining Ring .438 | 1 | 1 |
| 091-00031-0005 | Cable Clamp .312 | 1 | 1 |

## 1.5 ACCESSORIES REQUIRED BUT NOT SUPPLIED

A. Voltage changeover Kit (14 to 28 V dc) 050-01578-0000

Parts List as follows:

| PART NUMBER | DESCRIPTION | QUANTITY |
|---|---|---|
| | | -0000 |
| 050-01578-0000 | VOLT CHNGOVER KIT | X |
| 047-04159-0001 | SHIELD HEAT W/F | 1 |
| 089-02009-0037 | NUT HEX 4-40 | 2 |
| 089-02016-0037 | NUT HEX 10-32 | 2 |
| 089-05878-0008 | SCR PHP 4-40 X 1/2 | 2 |
| 089-05991-0012 | SCR PHP 10-32 X 3/4 | 2 |
| 089-08112-0034 | WSHR SPLT LK | 2 |
| 091-00009-0000 | GROMMET RUBBER | 2 |
| 132-00113-0004 | RES WW 10 55 W 5% | 1 |

B. Low Loss Antenna Installation Kit 050-01253-0002

Parts List as follows:

| PART NUMBER | DESCRIPTION | QUANTITY |
|---|---|---|
| | | -0002 |
| 050-01253-0002 | SC XPDR L/LOSS KIT | X |
| 006-01058-0004 | RF Connector Assy | 1 |
| 024-00072-0000 | CA Coax Low Loss | 210 in. |
| 030-00102-0001 | Connector RF | 1 |
| 030-00435-0000 | Connector Ant BNC | 1 |

## 1.6 LICENSE REQUIREMENTS

The transmitter, as installed in the aircraft, requires an Aircraft Radio Station License. This license is obtained by filing FCC Form 404. The KT 76A or KT 78A may be operated for up to 30 days without a station license, after filing the FCC Form 404 and while awaiting the receipt of the station license, if a copy of the FCC Form 404 is kept in the aircraft.

This equipment has been type accepted by the FCC and entered on their list of type accepted equipment as AlliedSignal KT 76A or AlliedSignal KT 78A and must be identified as AlliedSignal KT 76A or KT 78A on your FCC Form 404, Aircraft Radio Station License Application.

# SECTION II
# INSTALLATION

## 2.1 GENERAL INFORMATION

Installation of the KT 76A/78A will differ according to equipment location and other factors. Cable harnesses will be fabricated by the installing agency to fit these various requirements. This section contains interconnect diagrams, mounting dimensions and other information pertaining to installation.

The conditions and tests required for TSO approval of this article are minimum performance standards. It is the responsibility of those desiring to install this article either on or within a specific type or class of aircraft to determine that the aircraft installation conditions are within TSO standards. The article may be installed only if further evaluation by the applicant documents an acceptable installation and is approved by the Administrator.

## 2.2 UNPACKING AND INSPECTING EQUIPMENT

Exercise extreme care when unpacking the equipment. Make a visual inspection of the unit for evidence of damage incurred during shipment. If a claim for damage is to be made, save the shipping container to substantiate the claim. The claim should be promptly filed with the transportation company. It would be advisable to retain the container and packaging material after all equipment has been removed in the event that equipment storage or reshipment should become necessary.

## 2.3 INSTALLATION PROCEDURES

Listed below are factors and suggestions to consider before installing your KT 76A/78A. Close adherence to these suggestions will assure more satisfactory performance from your equipment. Also note the following instructions for voltage changeover in the KT 76A/78A and the caution concerning cooling considerations for the unit. The KT 76A/78A Interconnection Diagrams are depicted in (**Figure 2-2**) and (**Figure 2-3**).

## 2.4 VOLTAGE CHANGEOVER INSTRUCTIONS

The KT 76A/78A is designed to operate from 13.75 V dc input power. The panel lamps are internally wired to operate from either a 13.75 V dc or 27.5 V dc panel light system, depending on the connections at the rear connector. Details of this panel lamp option are shown on the Interconnect Diagram (**Figure 2-2**). No internal wiring changes are required.

To operate the unit from 27.5 V dc, a 10-ohm, 55-W resistor is installed in series with the power input pin. This resistor and associated hardware is included in the Voltage Changeover Kit, P/N 050-01578-0000 (refer to illustration **Figure 2-6**). Because of the heat it dissipates, this resistor should be mounted on the aircraft firewall or other structural member away from the avionics stack.

## 2.5 KT 76A/78A INSTALLATION

A. The KT 76A/78A are mounted rigidly in the aircraft panel.

B. Avoid mounting close to any external heat source. If this cannot be accomplished, the following caution must be adhered to.

CAUTION

THE GREATEST SINGLE CONTRIBUTOR TO INCREASED RELIABILITY OF ALL MODERN DAY AVIONICS IS TO LIMIT THE MAXIMUM OPERATING TEMPERATURE OF THE INDIVIDUAL UNITS WHETHER PANEL OR REMOTE MOUNTED. WHILE MODERN DAY INDIVIDUAL CIRCUIT DESIGNS CONSUME MUCH LESS ELECTRICAL ENERGY, THE WATTS PER CUBIC INCH DISSIPATED WITHIN AVIONICS UNITS REMAINS MUCH THE SAME BECAUSE OF THE HIGH DENSITY PACKAGING TECHNIQUES UTILIZED. CONSEQUENTLY, THE IMPORTANCE OF PROVIDING AVIONICS STACK COOLING IS ESSENTIAL TO THE LIFE SPAN OF THE EQUIPMENT. WHILE EACH INDIVIDUAL UNIT MAY NOT REQUIRE FORCED AIR COOLING, THE COMBINED HEAT LOAD OF SEVERAL UNITS OPERATING IN A TYPICAL AVIONICS STACK WILL SIGNIFICANTLY DEGRADE THE RELIABILITY OF THE AVIONICS IF PROVISIONS FOR STACK COOLING ARE NOT INCORPORATED IN THE INITIAL INSTALLATION. RECOMMENDATIONS ON STACK COOLING ARE CONTAINED IN ALLIEDSIGNAL INSTALLATION BULLETIN #55. FAILURE TO PROVIDE STACK COOLING WILL CERTAINLY LEAD TO INCREASED AVIONICS MAINTENANCE COSTS AND MAY VOID THE WARRANTY.

C. Allow adequate space for installation of cables and connectors.

D. Secure the mounting tray P/N 047-03898-0002 to instrument panel per **Figure 2-4**. The rearward mounting holes must be attached to a structural member of the airframe by means of support brackets.

E. Looking at the bottom of unit, make sure the front lobe of the holddown device is in a vertical position. This can be accomplished by using 3/32" allen wrench through the face plate.

F. Slide unit into tray until front lobe touches mounting tray.

G. Turn allen wrench clockwise until rear lobe engages with the tray slot. Continue turning wrench clockwise until tight.

CAUTION

DO NOT OVERTIGHTEN LOCKING SCREW.

H. For removal, turn 3/32" allen wrench counterclockwise until unit disengages from tray slot. Unit may then be removed.

## 2.6 MOLEX CONNECTOR ASSEMBLY PROCEDURE

The KT 76A/78A uses a special connector (refer to **Figure 2-1**) that mates directly with the Printed Circuit Board inside the unit. Assembly of the connector is as follows:

A. Solderless Contact Terminal Assembly using Molex Crimper
Refer to instructions in **Figure 2-1**.

B. Solderless Contact Terminal Assembly using Pliers

1. Strip each wire 5/32" for contact terminal (P/N 030-01107-0030). (The last two digits of the contact terminal part number indicate the number of terminals furnished).

2. Tin the exposed conductor.

3. Using needle nose pliers, fold over each conductor tab in turn, onto the exposed conductor. When both tabs have been folded, firmly press the tabs against the conductor.

4. Repeat step 3 for insulator tabs.

5. Apply a small amount of solder (using minimum heat) to the conductor/tab connection to assure a good electromechanical joint.

C. Contact Insertion into Molex Connector Housing

1. After the contact terminals have been installed on the wiring harness, the contact terminals can be inserted into the proper location in the connector housing (P/N 030-01094-0053). The terminal cannot be inserted upside down. Be sure to push the terminal all the way in, until a click can be felt or heard.

2. The self-locking feature can be tested by gently pulling on the wire.

D. Extraction of Contact from Molex Connector

1. Slip the flat narrow blade of a Molex contact ejector tool, HT-1884 (P/N 047-05099-0001) under the contact on the mating side of the connector. By turning the connector upside down one can see the blade slide into the stop.

2. When the ejector is slid into place, the locking key of the contact is raised, allowing the contact to be removed by pulling moderately on the lead.

3. Neither the contact or position is damaged by removing a contact; however, the contact should be checked visually before reinstalling in connector, to be certain that retaining tab "A" extends as shown (see **Figure 2-1**) for retention in connector.

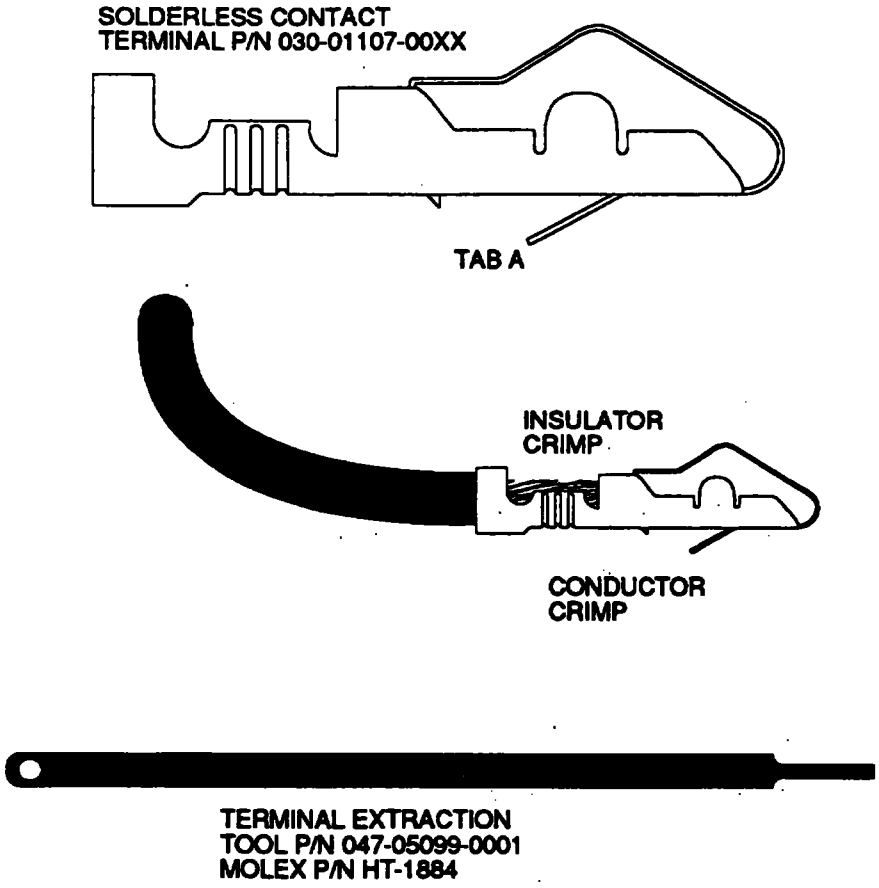


**FIGURE 2-1 CRIMPING TOOL**
**(Sheet 1 of 3)**

Holding the hand crimpers as shown, release the crimper's ratchet pawl and open by squeezing tightly on the handles, and then releasing pressure.

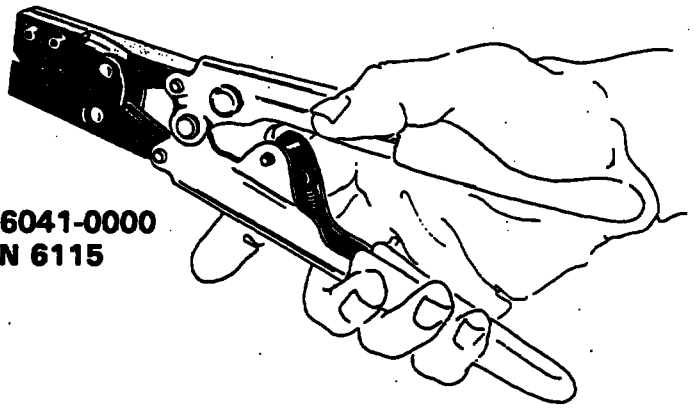

**HAND CRIMPER**
**P/N 071-06041-0000**
**MOLEX P/N 6115**

Close crimpers until ratchet begins to engage. Then insert terminal into jaws from the back side. (See the following; Figure 2-1). For 24 to 30 AWG wire, it will be necessary to start the crimp in jaw A and then complete in jaw B.

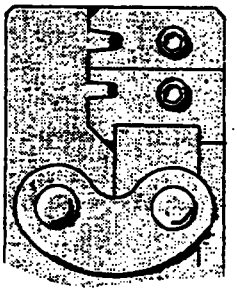

| JAW | TERMINAL | WIRE SIZE | INSULATION RANGE |
|---|---|---|---|
| A | 030-01107-0030 | 18 to 24 AWG | .110 TO .055 |
| B | 030-01107-0030 | 24 to 30 AWG | .055 to .030 |

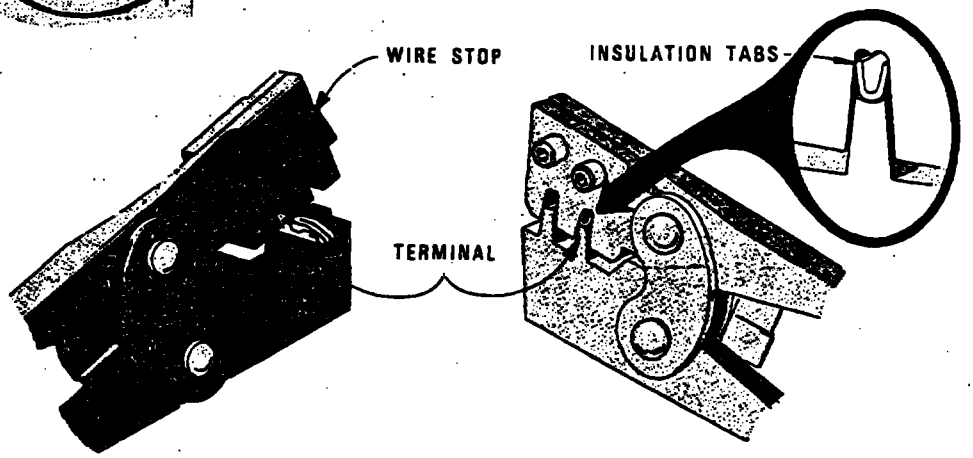


Terminal is in the correct position when insulation tabs are flush with outside face of crimp jaws.

**FIGURE 2-1 CRIMPING TOOL**
**(Sheet 2)**

Once the terminal is in the correct position, close the jaws gently until the terminal is held loosely in place. Push the wire stop down so that it rests snugly behind the contact portion of the terminal.

Strip off 1/8 inch of the wire insulation and insert the wire through the insulation tabs into the conductor tabs until the insulation hits the conductor jaw face or until the conductor touches the wire stop.

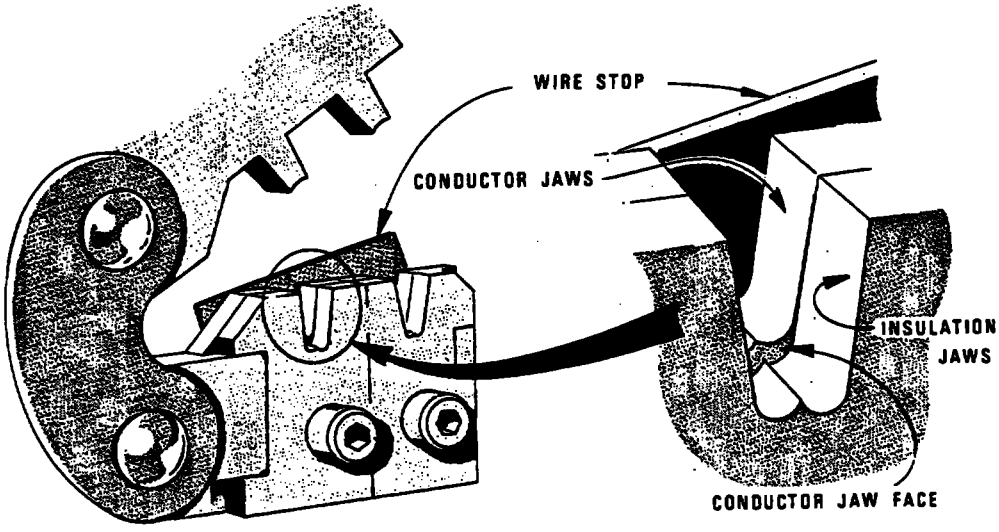


Squeeze the handles until the crimp jaws close and the ratchet releases.
Straighten the terminal if necessary, then release the plier grips and remove the crimped terminal.

CRIMPING PRESSURE ADJUSTMENT

If too much or too little pressure is needed to release the crmper's ratchet pawl at the end of the crimp stroke, the ratchet can be easily adjusted. A spanner wrench provided with the tool can be used to loosen the lock nut, and rotate the keyed stud clockwise for increased pressure and counter-clockwise for decreased pressure. Once the desired pressure has been set, the lock nut must be tightened again. Newer models may have a screwdriver adjustment.

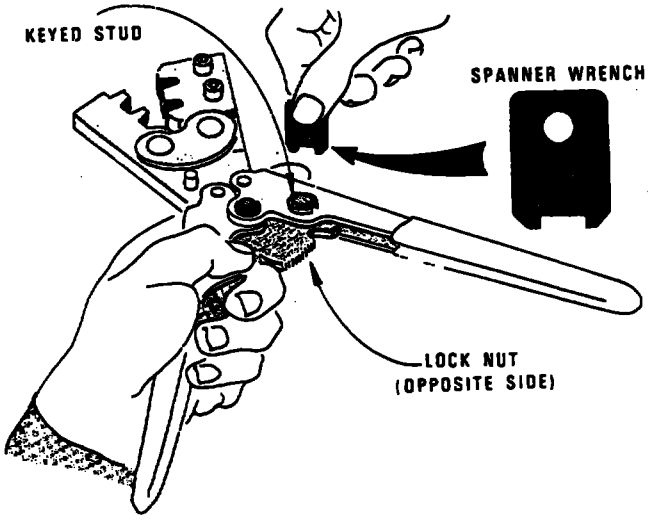


**FIGURE 2-1 CRIMPING TOOL**
**(Sheet 3)**

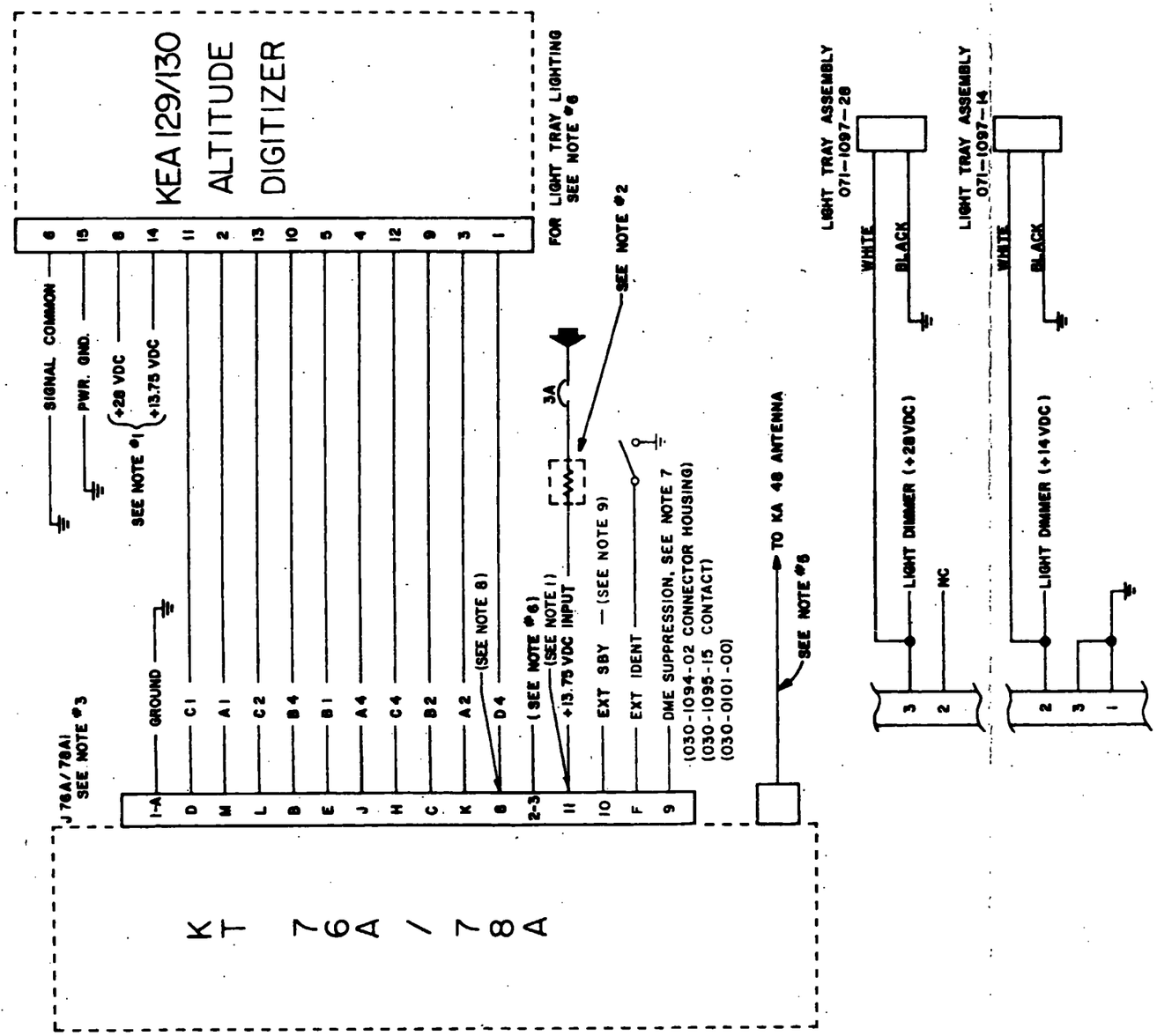


NOTES:

1. USE PIN 8 FOR 28 VDC OR PIN 14 FOR 13.75 VDC. DO NOT CONNECT PIN 8 AND PIN 14 TOGETHER. DO NOT CONNECT PIN 8 OR PIN 14 TO THE NON-SWITCHED INPUT ON PIN 11 OF THE KT 76A/78A BECAUSE DAMAGE TO THE ALTITUDE DIGITIZER COULD OCCUR. IF PIN 14 IS CONNECTED TO PIN 11 OF THE KT 76A/78A IN A 28 VDC AIRCRAFT POWER SYSTEM WHEN THE TRANSPONDER IS TURNED OFF, THE VOLTAGE AT PIN 11 WILL BE APROXIMATELY 28VDC THROUGH THE SERIES DROPPING RESISTOR. CONNECT THE INPUT OF THE ALTITUDE DIGITIZER TO A SWITCHABLE VOLTAGE.
2. **14 TO 28 VDC CHANGEOVER KIT MUST BE MOUNTED ON AIRCRAFT FIREWALL OR OTHER STRUCTURAL MEMBER AWAY FROM THE AVIONICS STACK.**
3. **CONNECTOR TERMINALS NUMBER IS SPECIFIED ON CONNECTOR.**
4. **ALL WIRES SHOULD BE #22 AWG.**
5. **ROUTE THE ANTENNA CABLE AS FAR AS PRACTICAL FROM ANY HARNESS BUNDLE. IN NO CASE SHOULD THE ANTENNA CABLE BE LACED INTO A HARNESS BUNDLE.**
6. **CONNECTOR WIRING FOR LIGHT DIMMERS.**
7. **ACCEPTS POSITIVE GOING SUPPRESSION PULSES. REFER TO KT76A/78 A SERVICE BULLETIN-3 REVISED FOR INCORPORATION OF THE SUPPRESSION CIRCUITRY IF THE KT76A IS BELOW S/N 14000 AND THE KT 78A IS BELOW 7000.**
8. **TO BE USED WITH DIGITIZER RATED AT 31,000 FEET AND ABOVE. THERE IS NO VALID INFORMATION ON THE D4 BELOW 31,000 FEET. NO DAMAGE WILL OCCUR IF D4 IS CONNECTED TO A DIGITIZER RATED BELOW 31,000 FEET.**
9. **EXT SBY WHEN TIED TO GROUND WILL PLACE THAT UNIT IN SBY MODE. KT76A S/N 35,900 AND ABOVE WITH MOD 5 STATUS PROVIDES EXT SBY FUNCTION, S/N 35,899 AND BELOW AND ALL KT78A UNITS, MOD5 MAY BE INCORPORATED.**

NOTE 9 CONT.

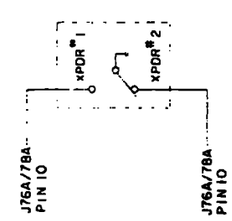


**FIGURE 2-2 KT 76A/78A INTERCONNECT DIAGRAM**

**(Dwg. No. 155-01234-0000, R-4)**

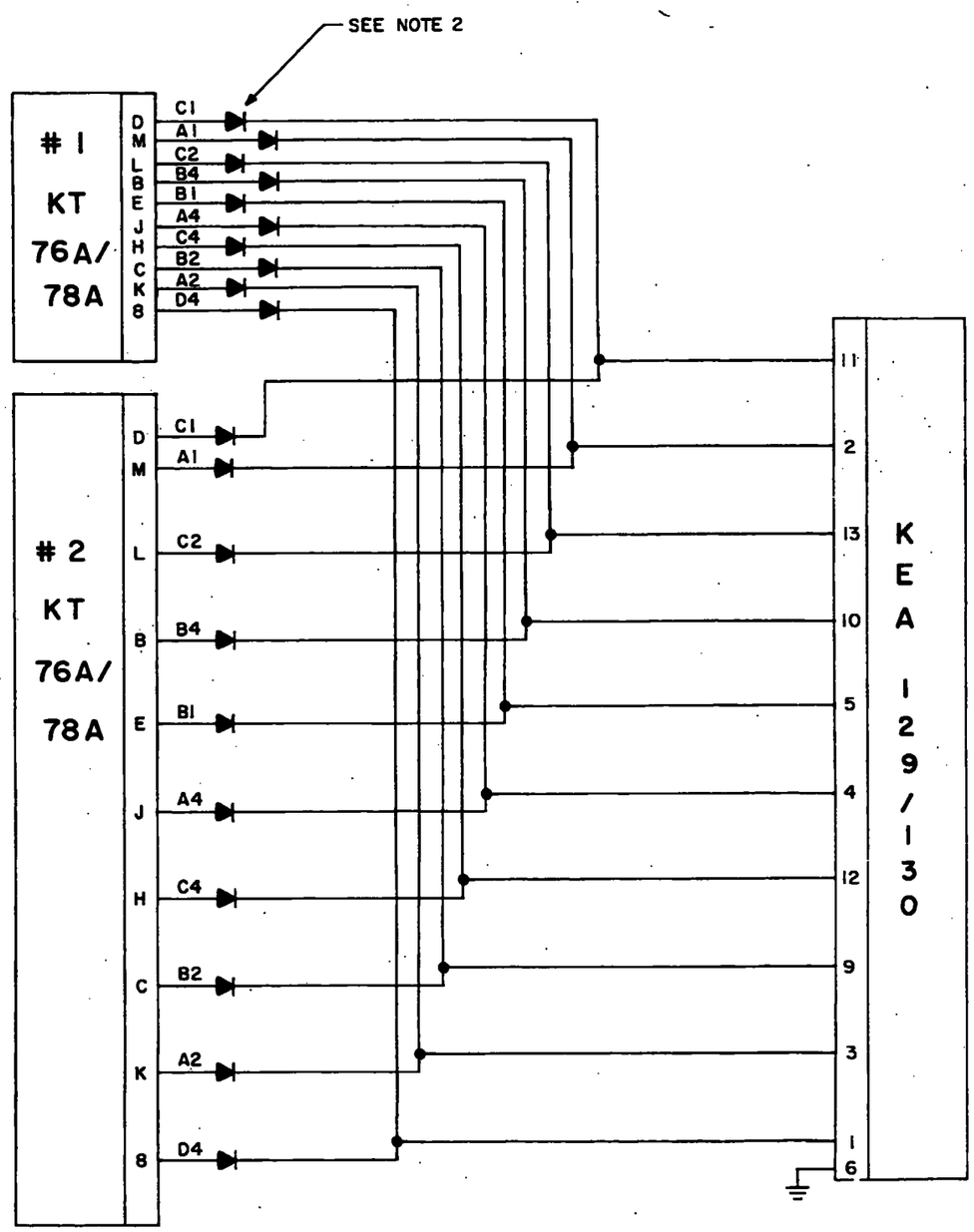


**Figure 2-3 DUAL TRANSPONDER INTERCONNECT**
**(Dwg. No. 155-01363-0000, R-2)**

NOTES:

1. BOTH UNITS CANNOT BE ACTIVE AT THE SAME TIME, THE PILOT WILL HAVE TO MANUALLY PLACE ONE UNIT IN STANDBY.
2. ISOLATION DIODES MUST BE ADDED TO ALL ALTITUDE CODE LINES WHEN ONLY ONE ENCODING ALTIMETER IS GOING TO BE USED. IN4154 DIODES (KPN 007-6016-00) MAY BE USED. DIODES ARE FACTORY INSTALLED INSIDE KT 76A FOR SERIAL NUMBERS ABOVE 40,000.

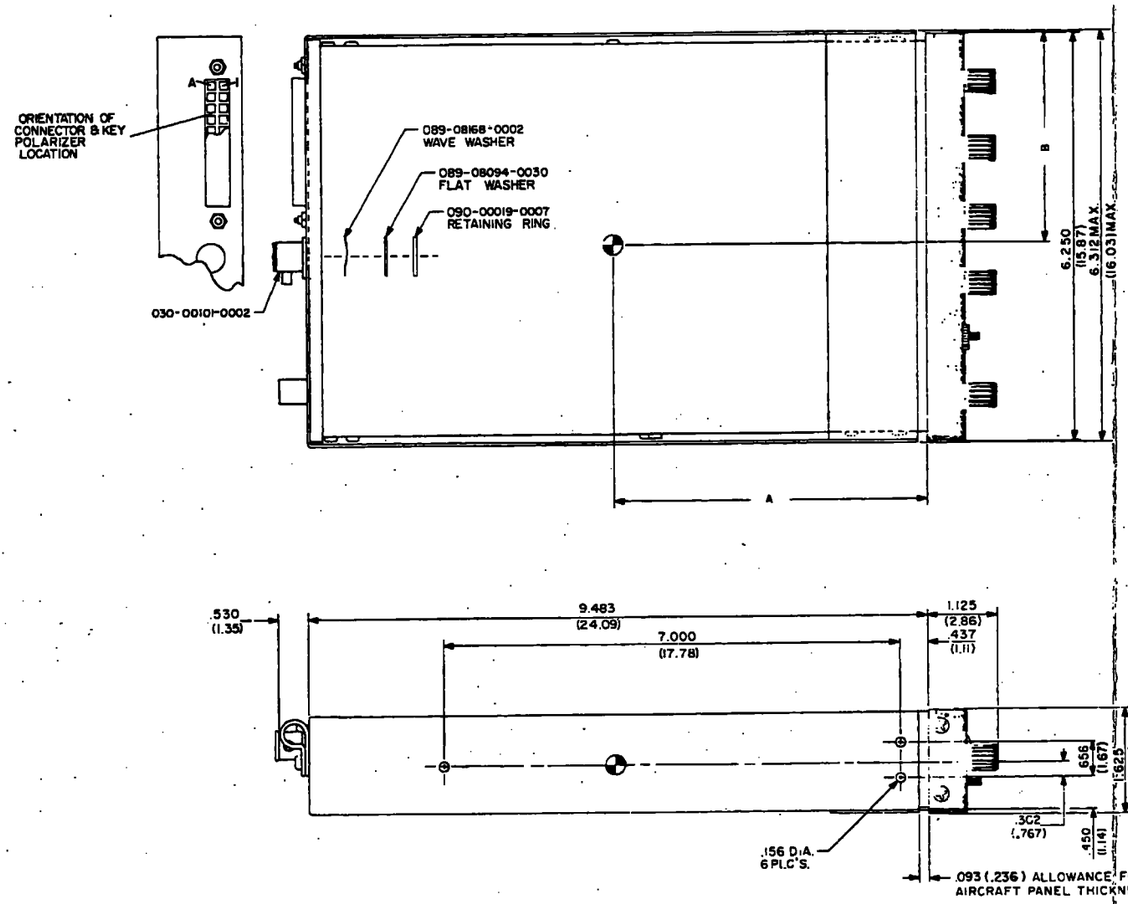


NOTES:

1. UNITS WITH SERIAL NUMBER LESS THAN 110,000:
   WEIGHT WITHOUT RACK, CONNECTORS: 2.6 LBS, 1.18 kg.
   WEIGHT WITH RACK, CONNECTORS: 3.1 LBS, 1.40kg.
   CENTER OF GRAVITY "A" DIMENSION: 5.25 [13.34].
   CENTER OF GRAVITY "B" DIMENSION: 3.25 [8.26].

   UNITS WITH SERIAL NUMBER GREATER THAN 110,000:
   WEIGHT WITHOUT RACK, CONNECTORS: 1.7 LBS, 0.74kg.
   WEIGHT WITH RACK, CONNECTORS: 2.0 LBS, 0.89kg.
   CENTER OF GRAVITY "A" DIMENSION: 4.75 [12.07].
   CENTER OF GRAVITY "B" DIMENSION: 3.35 [8.51].

TOLERANCE OF C/G DIMENSIONS ± .10 [0.25].
TOLERANCE OF ALL WEIGHTS ± 0.1 LB, 0.05kg.

2. UNITS: INCHES,[CENTIMETERS].

**FIGURE 2-4 KT 76A/78A OUTLINE AND MOUNTING DRAWING**

**(Dwg. No. 155-05242-0000, R-5)**

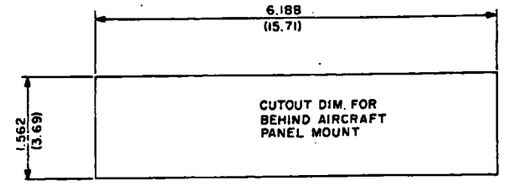


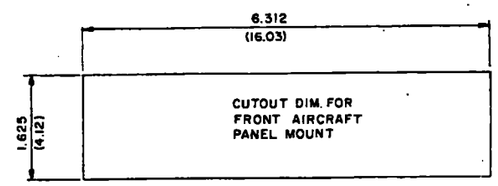


KT 76A CABLE

| PART NUMBER | FIGURE |
|---|---|
| 066-1062-00 | 1 |
| 066-1062-02 | 3 |
| 066-1062-10 | 2 |

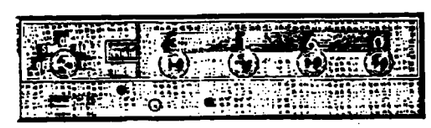

FIGURE 1

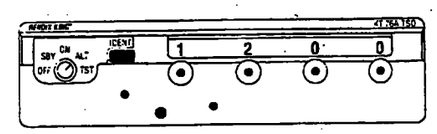


FIGURE 2

## 2.7 KA 60 INSTALLATION

Refer to **Figure 2-5** and **Figure 2-7** for illustrations relating to the KA 60.

A. Peel the backing off the antenna template and apply template to the aircraft at the desired mounting location.

B. Drill or cut the proper size holes for mounting the antenna, then remove the template.

C. Using the antenna as a stencil, draw a line around the base of the antenna that will come into contact with the aircraft. Then carefully scrape off the paint within the stenciled area. Lightly sand the bare metal with fine sandpaper to insure removal of all paint and protective coatings.

D. Sand the inside area of the aircraft where the backing plate will be located to remove the chromate or other protective finish.

E. Apply Aluminprep No. 33 (P/N 016-01127-0000) following the directions on the container to cleanse the metal of any residue.

F. Apply Alodine No. 1001 (P/N 016-01128-0000) following the directions on the container.

G. Rivet the backing plate (P/N 047-04570-0000) into place, if required.

H. Mount the antenna using #8 star washers (P/N 089-08017-0037) and 8-32 nuts (P/N 089-02148-0032) included with the antenna.

I. RG-142 or equivalent coaxial cable is normally used on installations having a cable run of ten feet or less. For cable runs from nine to 17.5 feet, use low loss antenna installation kit (P/N 050-01253-0002).

J. Inspect coaxial cable connector for proper center contact, then fasten it securely to the antenna.

## 2.8 LOCATION CONSIDERATIONS

A. The antenna should be well removed from any projections, the engine(s) and propeller(s). It should also be well removed from landing gear doors, access doors, or other openings which will break the ground plane for the antenna.

B. The antenna should be mounted on a bottom surface of the aircraft and in a vertical position when the aircraft is in level flight.

C. Avoid running other cables or wires near the antenna cable.

D. Avoid mounting the antenna within three (3) feet of the ADF sense antenna or any COMM antenna and six (6) feet from the transponder to DME antenna.

E. Where practical, plan the antenna location to keep cable lengths as short as possible, and avoid sharp bends in the cable to minimize the VSWR.

F. To prevent RF interference, the antenna must by physically mounted a minimum distance of three feet from the KT 76A/78A.

G. A back-up plate should be used for added strength on thin-skinned aircraft.

H. The antenna should be kept clean. If left dirty (oil covered) the range of the Transponder may be affected.

I. On pressurized aircraft, the antenna should be sealed using RTV (P/N 016-01082-0000) around the connector and mounting hardware.

J. All antennas should be sealed around the outside for moisture protection.

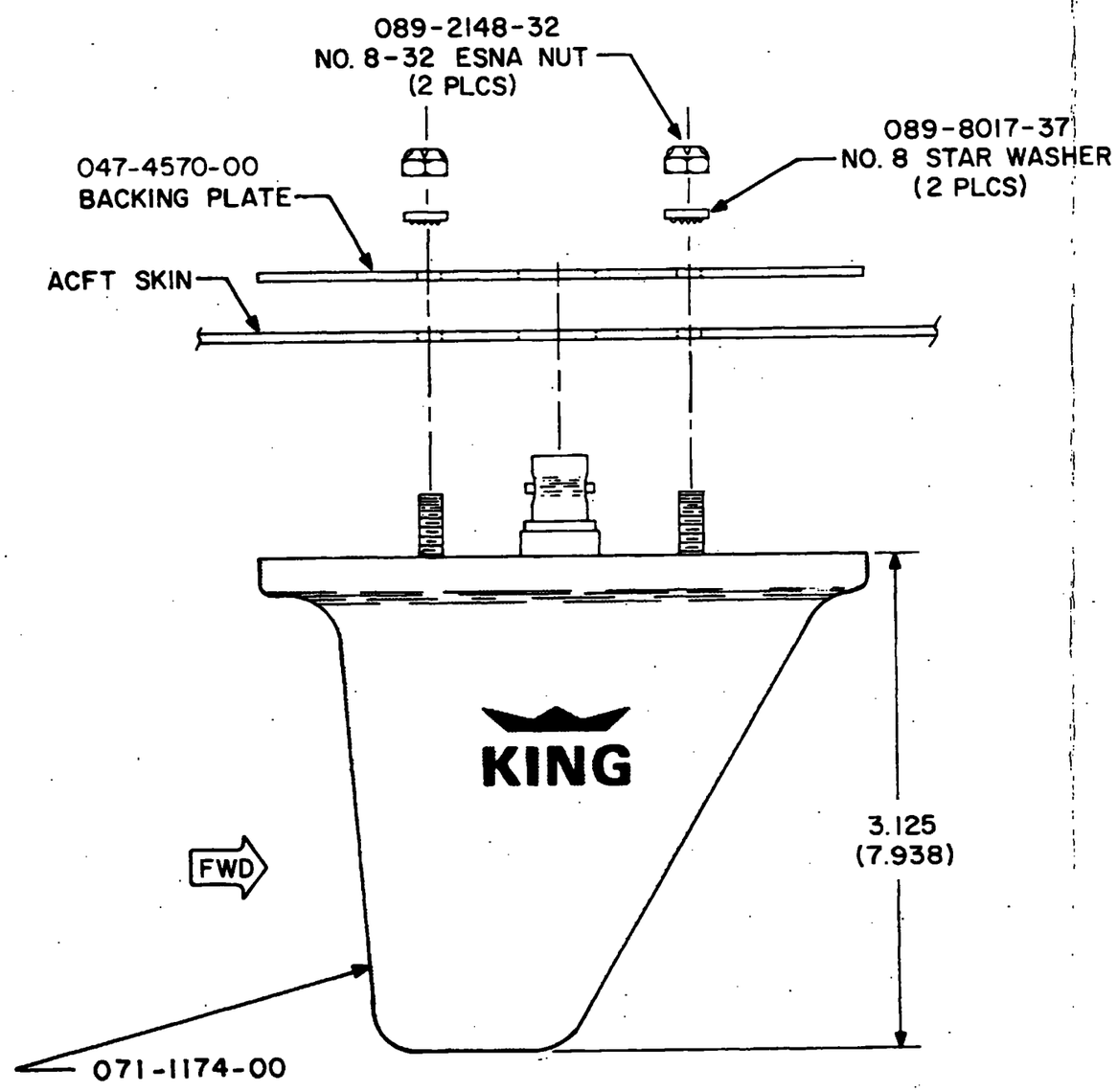


MOUNTING
HOLE CUTOUT DIAGRAM

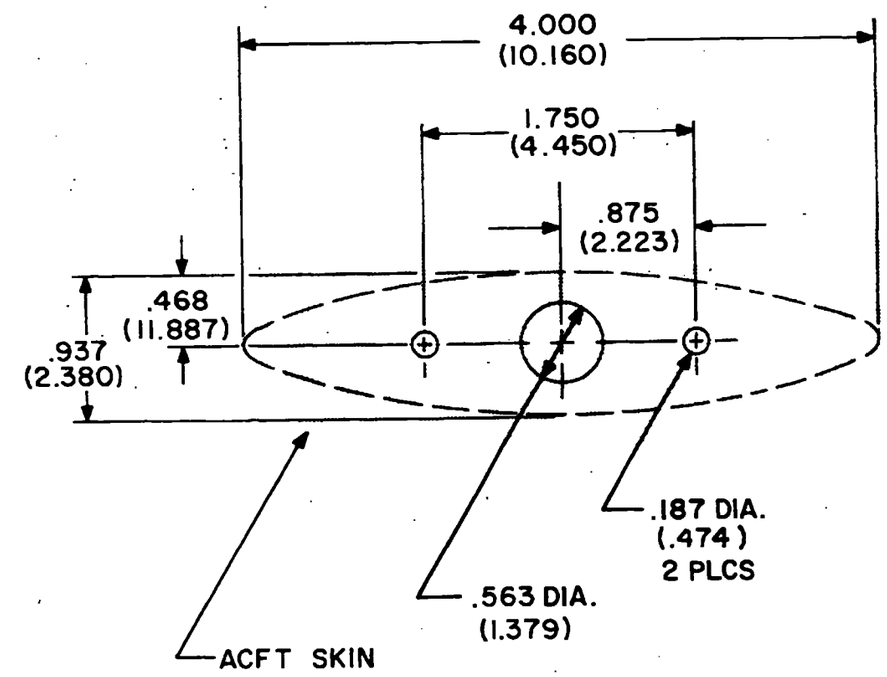


NOTE :
DIMENSIONS IN PARENTHESES ( ) ARE IN CENTIMETERS.

**FIGURE 2-5 KA 60 ANTENNA INSTALLATION DRAWING**
**(Dwg. No. 155-05289-0000, R-2)**

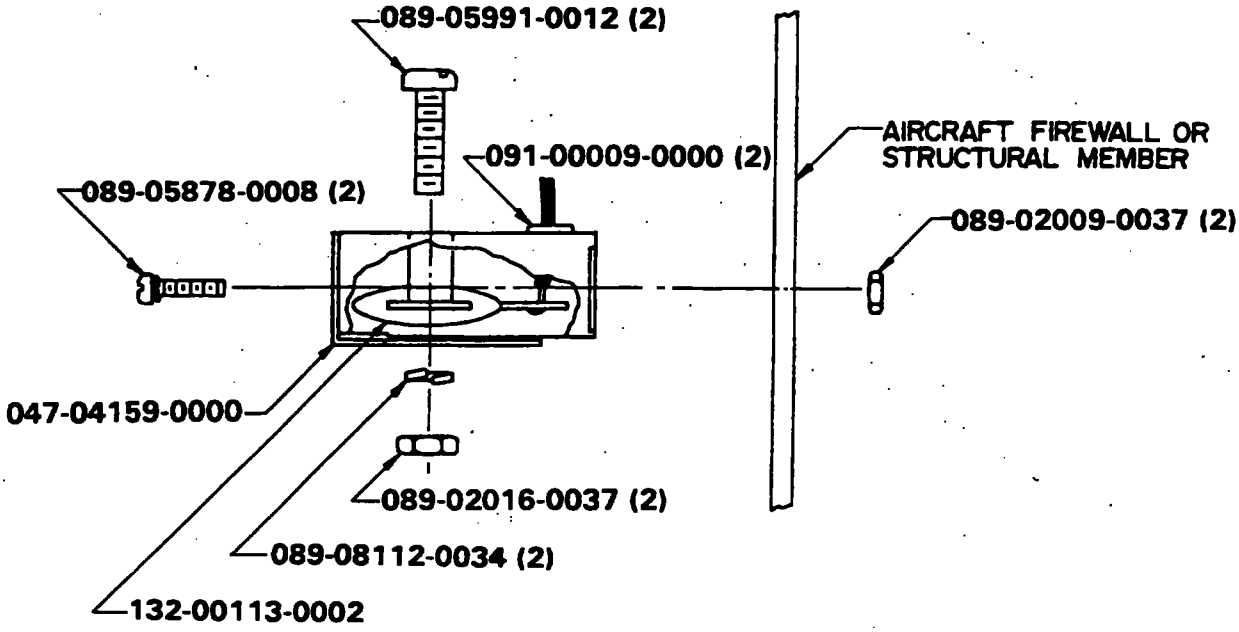


**FIGURE 2-6 VOLTAGE CHANGEOVER KIT ASSEMBLY**

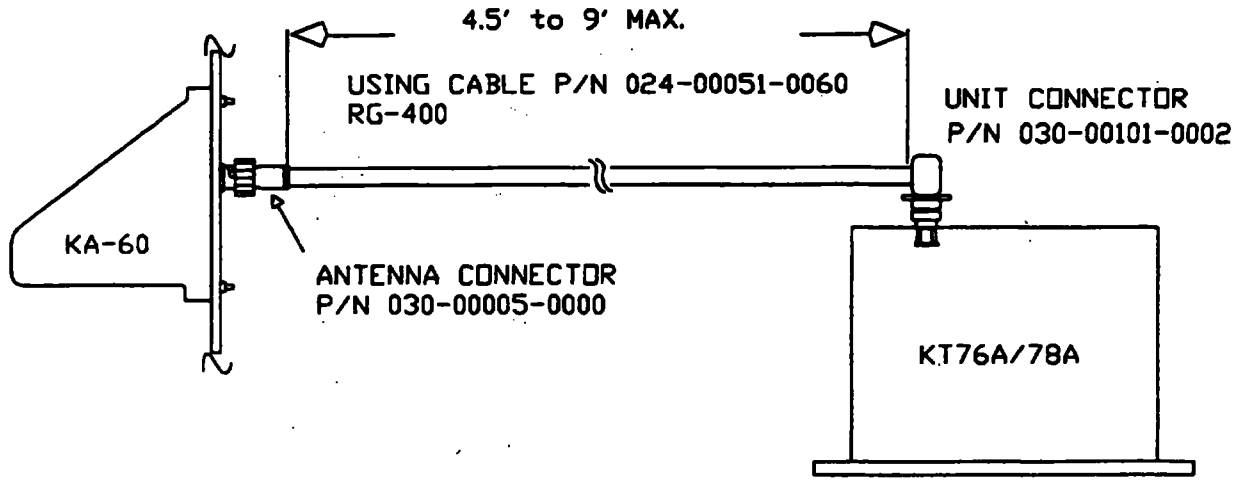


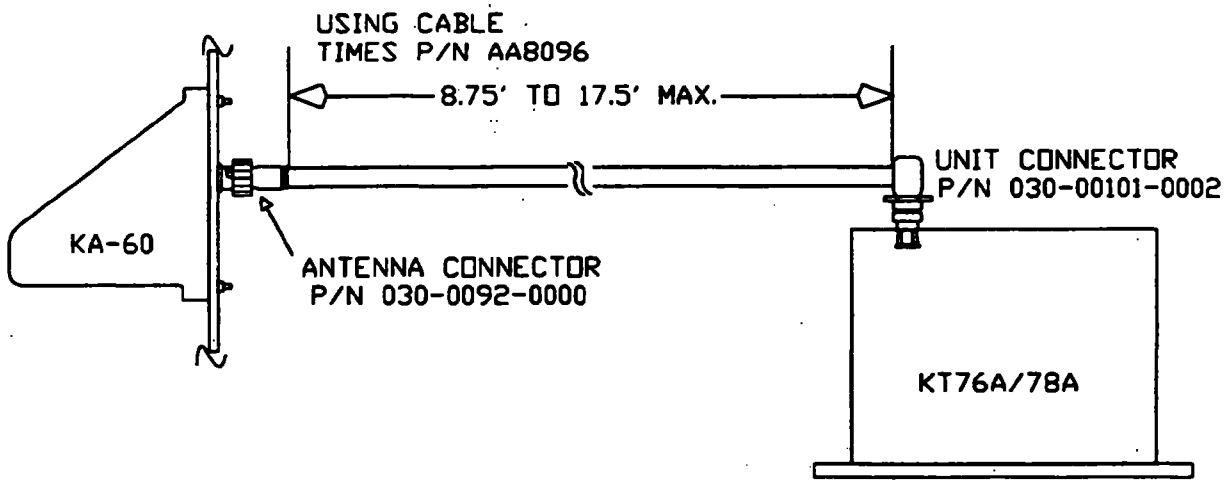


**FIGURE 2-7 ACCEPTABLE CABLE CONNECTIONS DRAWING**
**(Sheet 1 of 4)**

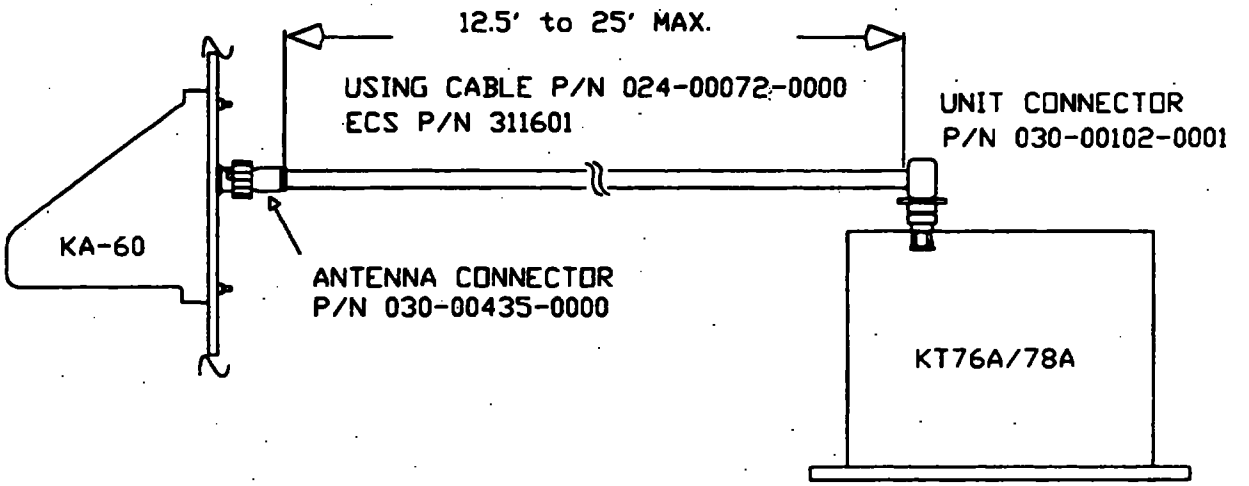


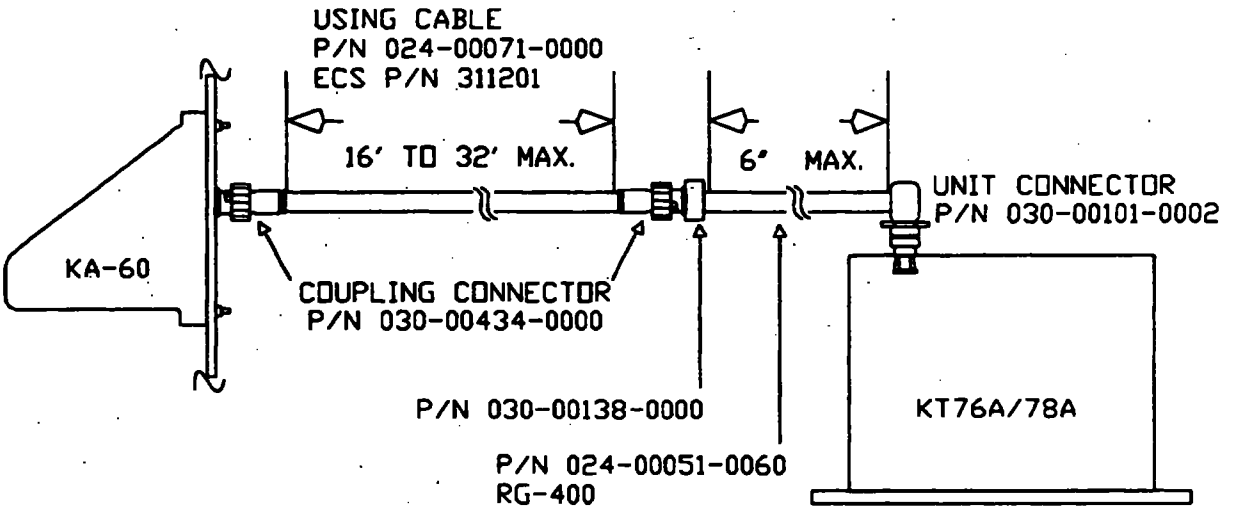


**FIGURE 2-7 ACCEPTABLE CABLE CONNECTIONS DRAWING**
**(Sheet 2)**

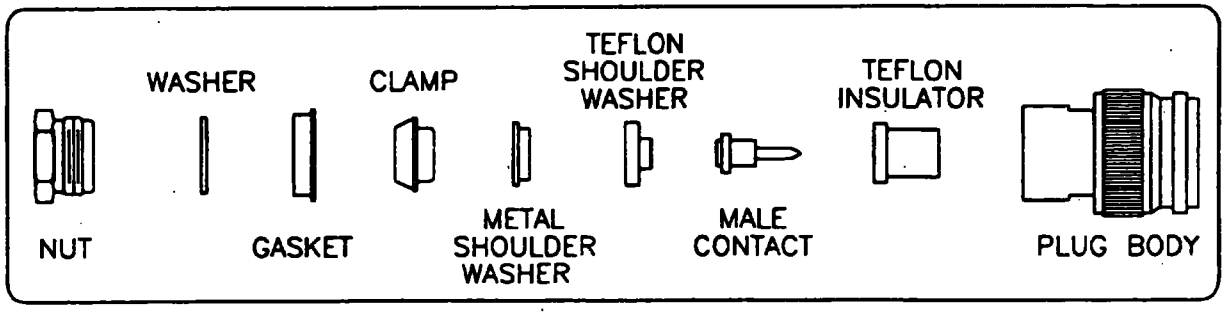


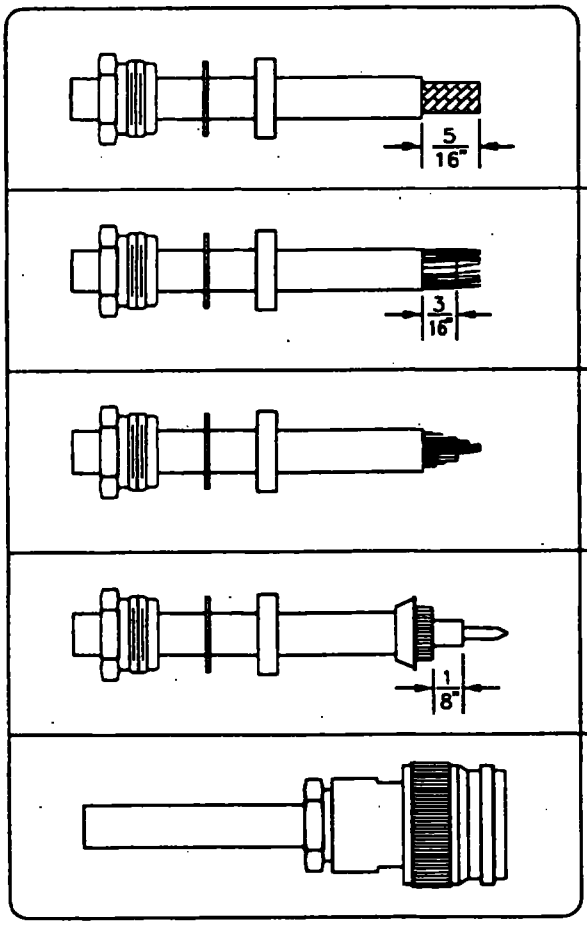


Place nut and gasket, with "V" groove toward clamp, over cable and cut jacket to dimension shown.

Comb out braid and fold out. Cut cable dielectric to dimension shown. Tin center conductor, using minimum amount of heat.

Pull braid wires forward and taper toward center conductor. Place clamp over braid and push back against cable jacket.

Fold back braid wires as shown, trim to proper length and form over clamp as shown. Slip metal shoulder washer and teflon shoulder washer over center conductor and teflon insulator. Solder contact to center conductor, avoiding excessive heat which might swell cable dielectric. Slip teflon insulator over contact.

Insert prepared cable termination into connector body. Make sure sharp edge of clamp seats properly in gasket. Tighten nut.

**FIGURE 2-7 ACCEPTABLE CABLE CONNECTIONS DRAWING (Sheet 3)**

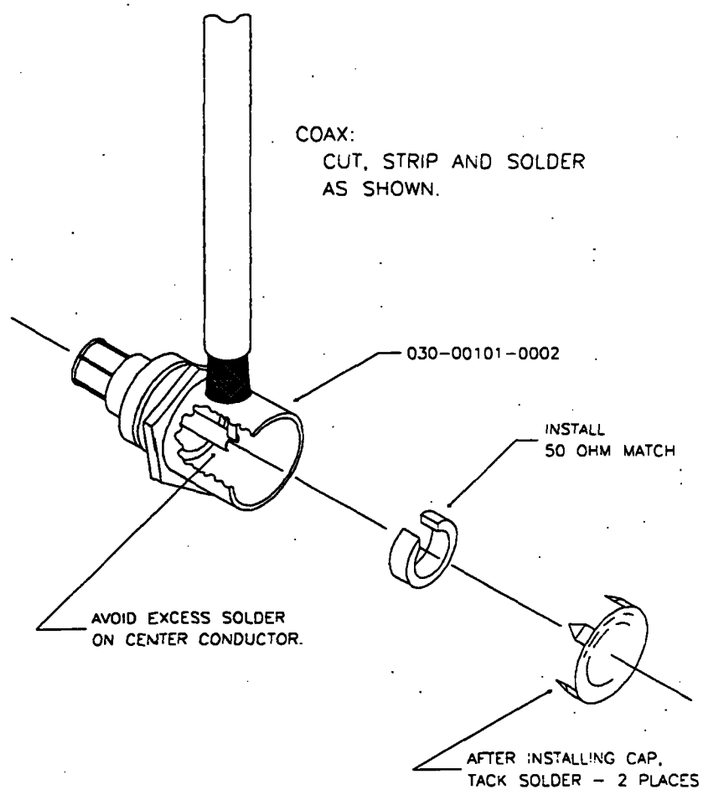


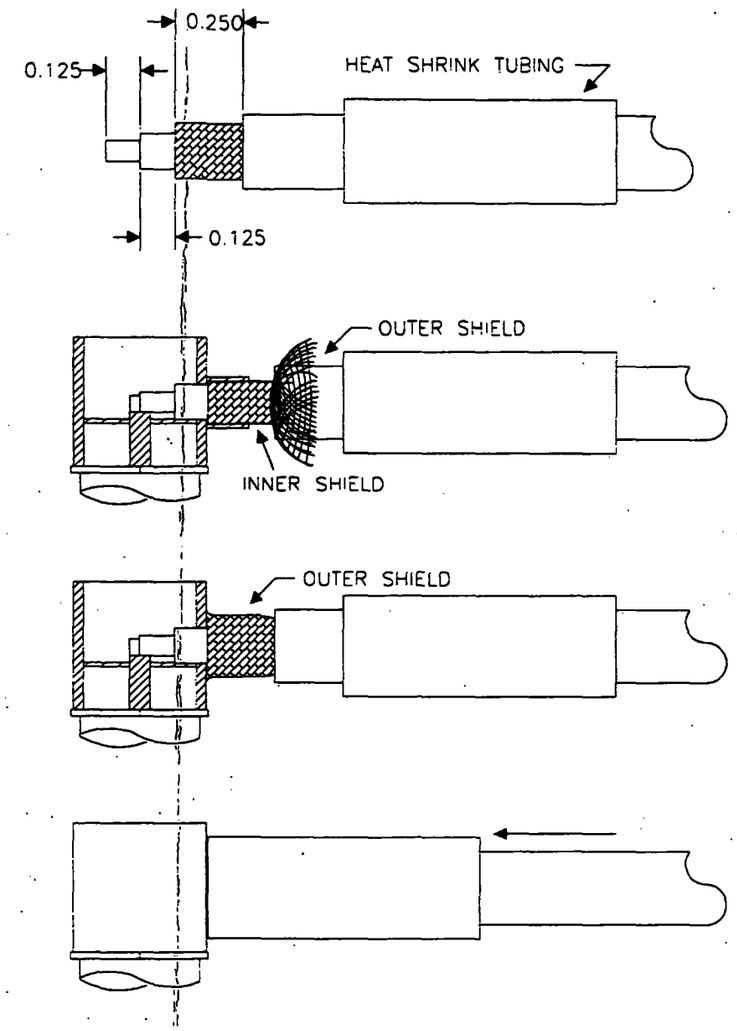


1. STRIP RG-142B/U (P/N 024-00002-0000) AND PLACE 1" HEAT SHRINK TUBING (P/N 150-00025-0010) OVER COAX.
2. SOLDER CENTER CONTACT AND SOLDER INNER SHIELD INSIDE. SEE NOTE 1.
3. SOLDER OUTER SHIELD OUTSIDE. SEE NOTE 1.
4. SLIDE HEAT SHRINK TUBING FORWARD (FLUSH WITH CONNECTOR) AND ADD HEAT TO SHRINK THE TUBING.

NOTES:

1. WHEN SOLDERING, AVOID APPLYING EXCESS HEAT TO CONNECTOR BODY, HEAT SINK SPRING CONTACTS, AND CENTER CONDUCTOR INSULATOR.

**FIGURE 2-7 ACCEPTABLE CABLE CONNECTIONS DRAWING (Sheet 4)**

# SECTION III
# OPERATION

## 3.1 NORMAL OPERATION

The transponder is turned on by rotating the function selector from the off position to any other position.

**NOTE**

The KT 76A/78A should be turned off before starting aircraft engine(s).

After being turned on, there is a 45 second delay before the unit becomes functional. This is to permit the transmitter tube to warm up and stabilize. Usually the function switch will be rotated to the "standby" position, however, any operative position will initiate the time delay turn on. Any time that the function switch is in the "ON" or "ALT" position the transponder becomes an active part of the beacon system. It is undesirable from a systems view point to be operating (function selector in either of these positions) while on the ground, taxiing, or running up at a terminal with a co-located beacon interrogator. Attention should be paid to the code selected on the control head. The selected code should be in accordance with instructions for IFR flight or rules applicable to transponder utilization for VFR flight.

**NOTE**

Never activate the transponder with either Code 0000, 7700 or 7777 selected on the control head. Code 7700 is selected for emergencies.

During normal transponder operation, a flashing lamp is an indication of a transmitted reply. An interrogation will normally be at 10-15 second intervals. Lamp flashes within this interval may be from noise, a second or third interrogator, or from side lobes from interrogators without side lobe suppression.

"ON" function will be the customary mode of operation. If an altitude digitizer is part of the system then "ALT" function will be selected if altitude reporting is requested by traffic control. "ALT" function enables the transponder to encode an altitude reply.

The IDENT feature is used at the request of the traffic controller. The IDENT button is depressed momentarily and then released. A memory holds the IDENT reply for an interval to assure the proper reply for at least one radar sweep. This memory also turns the reply lamp on steady as an indication of the ident function.

**NOTE**

Consult the airport/facility directory section of the Airman's Information Manual for the location of radar beacons. Air traffic control radar beacon system (ATCRBS) Description: AIM, Section I. Radar beacon proceudres: AIM, Section II.

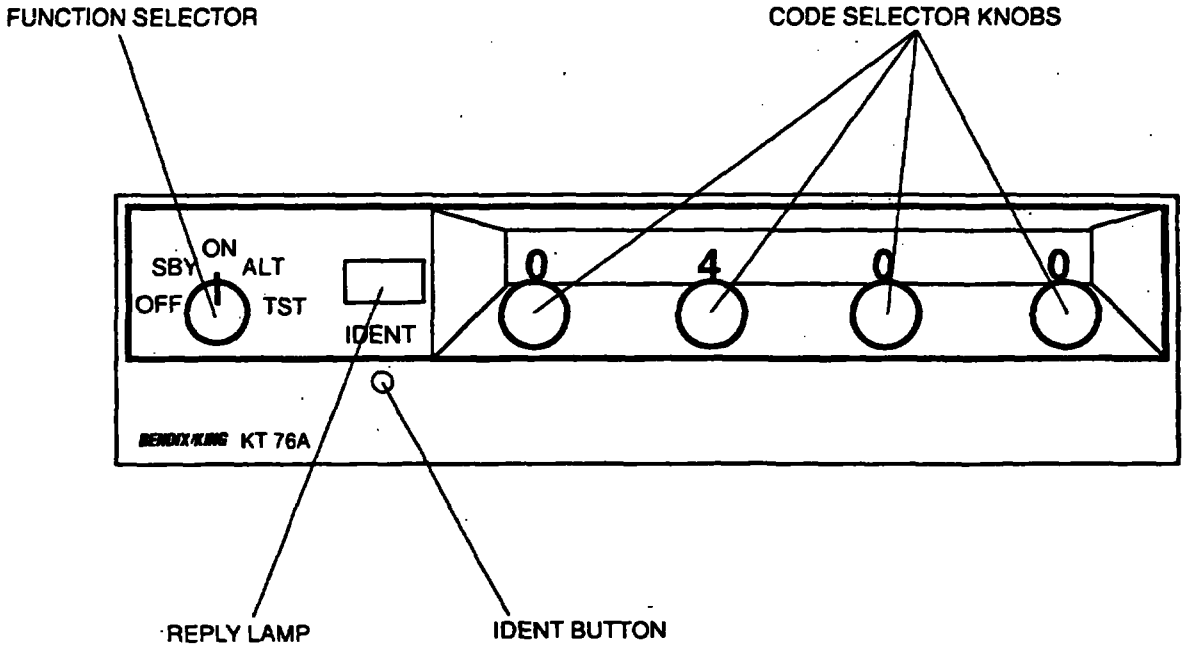


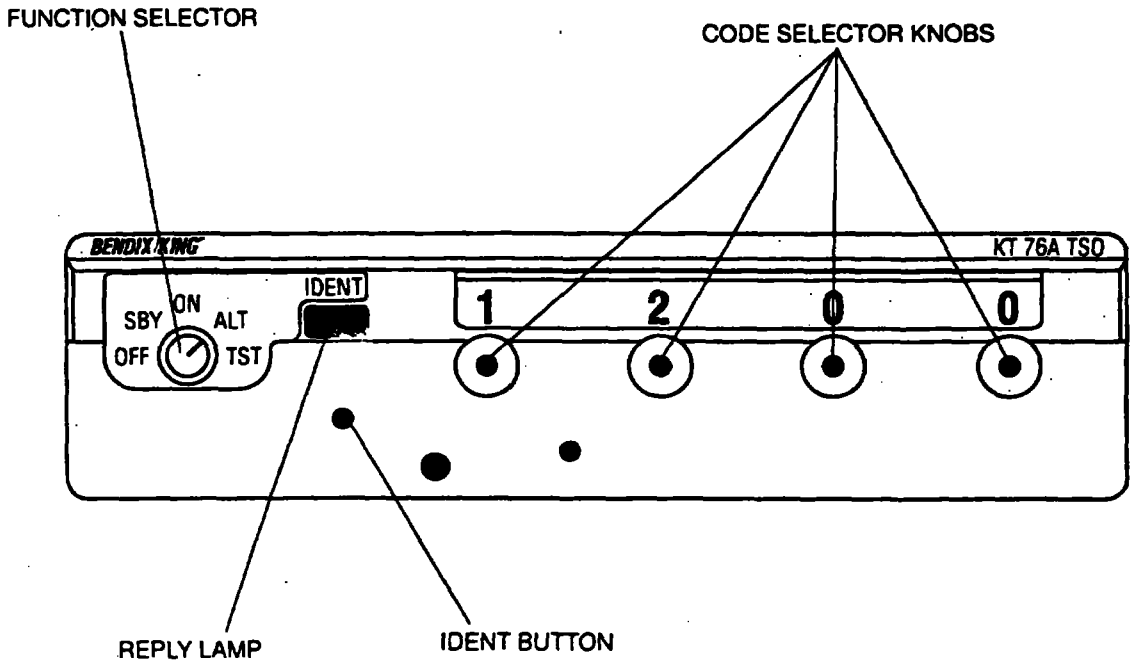


**FIGURE 3-1 KT 76A/78A TRANSPONDER CONTROLS**

Section I, II, and III have been deleted from the Maintenance-Overhaul Manual format. The Installation Manual, which covers the same installation information, should be added behind the red Installation Manual Tab provided in this binder.

# MAINTENANCE/OVERHAUL MANUAL
## SECTIONS IV, V AND VI

AlliedSignal

ELECTRONIC AND AVIONICS SYSTEMS

# MAINTENANCE MANUAL

BENDIX/KING®

# KT 76A/78A

## ATCRBS TRANSPONDER

MANUAL NUMBER 006-05143-0006

REVISION 6, NOVEMBER 1996

WARNING

INFORMATION SUBJECT TO THE EXPORT CONTROL LAWS. THIS DOCUMENT, WHICH INCLUDES ANY ATTACHMENTS AND EXHIBITS HERETO, CONTAINS INFORMATION SUBJECT TO INTERNATIONAL TRAFFIC IN ARMS REGULATION (ITAR) OR EXPORT ADMINISTRATION REGULATION (EAR) OF 1979, WHICH MAY NOT BE EXPORTED, RELEASED OR DISCLOSED TO FOREIGN NATIONALS INSIDE OR OUTSIDE THE U.S. WITHOUT FIRST OBTAINING AN EXPORT LICENSE. VIOLATORS OF ITAR OR EAR MAY BE SUBJECT TO A PENALTY OF 10 YEARS IMPRISONMENT AND A FINE OF $1,000,000 UNDER 22 U.S.C. 2778 OR SECTION 2410 OF THE EXPORT ADMINISTRATION ACT OF 1979. INCLUDE THIS NOTICE WITH ANY REPRODUCED PORTION OF THIS DOCUMENT.

## SECTION IV
## THEORY OF OPERATION



## SECTION V
## MAINTENANCE

## SECTION VI
## ILLUSTRATED PARTS LIST



## LIST OF ILLUSTRATIONS

## TROUBLESHOOTING AIDS

# SECTION IV

# THEORY OF OPERATION

## 4.1 INTRODUCTION

General description of the KT 76A/78A Transponder and its use in the Air Traffic Control Radar Beacon System:

The KT 76A/78A Transponder is an integral part of the Air Traffic Control Radar Beacon System (ATCRBS). In the aircraft, its function is to transmit a coded response to a coded interrogation transmitted by an air traffic control ground radar station.

There are two types of radar at each of these ATC ground stations. The first, called the Primary Surveillance Radar (PSR), operates on the normal radar principle of receiving energy reflected from the aircraft under surveillance. The second, called the Secondary Surveillance Radar (SSR), operates on the coded reply from the airborne transponder. Both radars are used in conjunction to develop the total air traffic situation and to display it on a single radar scope. A typical air traffic control ground station is shown in **Figure 4-1**.

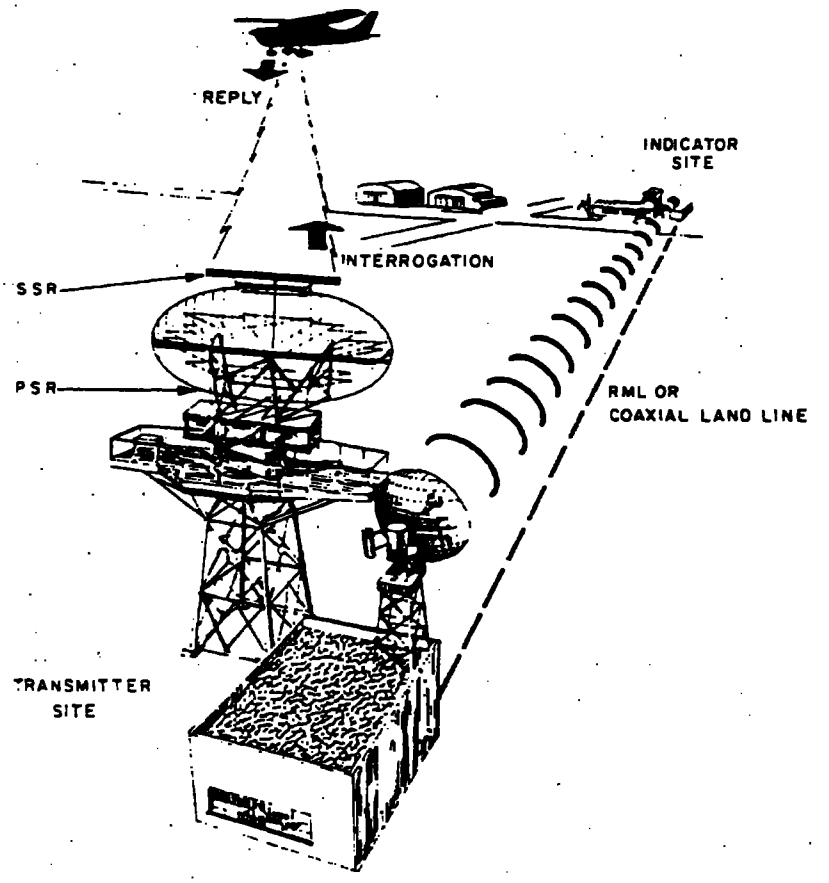


**FIGURE 4-1 ATCRBS TRANSMITTER SITE**

The SSR interrogates the KT 76A/78A in one of two modes. These are referred to as Mode "A" or Mode "C" interrogations. The type of interrogation is determined by the spacing between two pulses transmitted by the SSR on a carrier of 1030 ± 2 MHz. Each interrogation contains a third pulse at the same frequency which is not transmitted by the SSR but by an omni directional antenna which is located at the ground radar station. This pulse is transmitted 2 µsec after the first pulse transmitted by the SSR. Mode "A" and Mode "C" interrogation characteristics are shown in **Figure 4-2.**

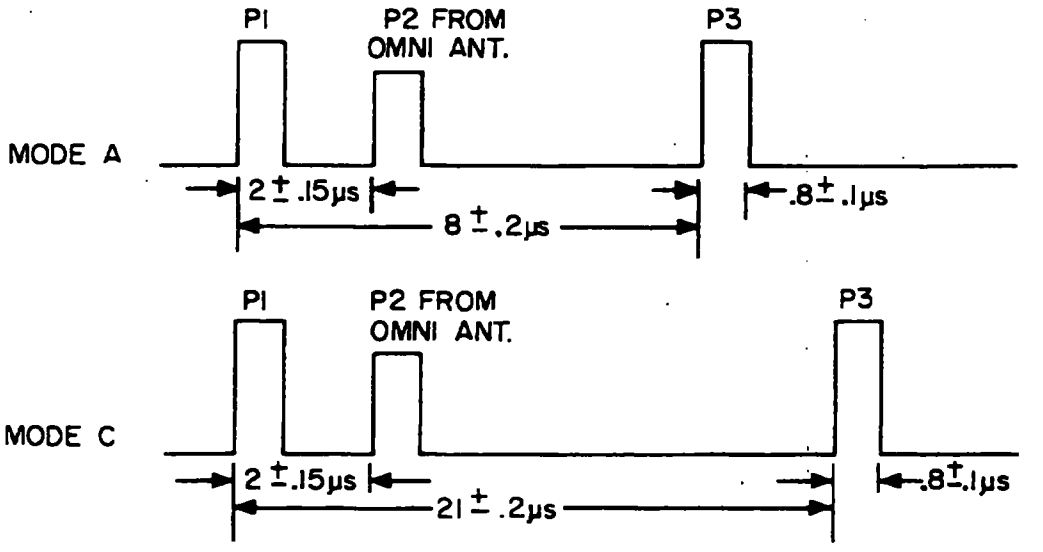


**FIGURE 4-2 INTERROGATION CODING CHARACTERISTICS**

The purpose of P2, the signal from the omni-directional antenna, is to allow the airborne transponder to determine whether the interrogation came from the main beam or a side lobe of the SSR. If the KT 76A/78A has been interrogated by a side lobe, no reply is generated. A reply to a side lobe interrogation would give the ground radar operator an erroneous position reading of the aircraft carrying the transponder. The KT 76A/78A determines by an amplitude comparison between P1 and P2, if the interrogation is a valid main beam interrogation. If P2 is equal to or larger then P1, the interrogation is from the side lobe of the SSR. The reason these conditions exist can be explained with the composite antenna pattern of the ground station as shown in **Figure 4-3.**

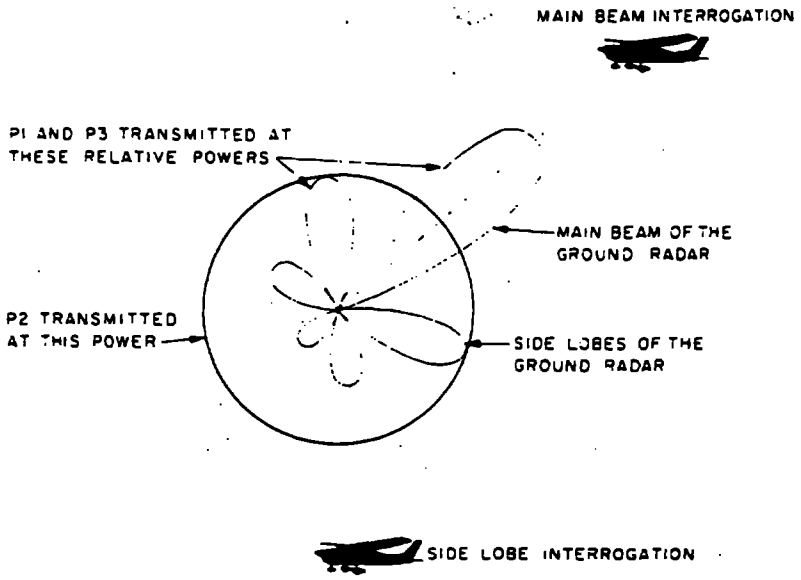


**FIGURE 4-3 COMPOSITE ANTENNA PATTERN OF THE GROUND STATION**

It is seen that the power received from the omni directional antenna is less than the power received from the main beam but larger than the power received from any of the side lobes of the SSR. This is why in a main beam interrogation, P1 is larger than P2; and in a side lobe interrogation, P2 is equal to or larger than P1. The detailed specifications of transponder reply and side lobe suppression characteristics for the ATCRBS are shown in **Figure 4-4**.

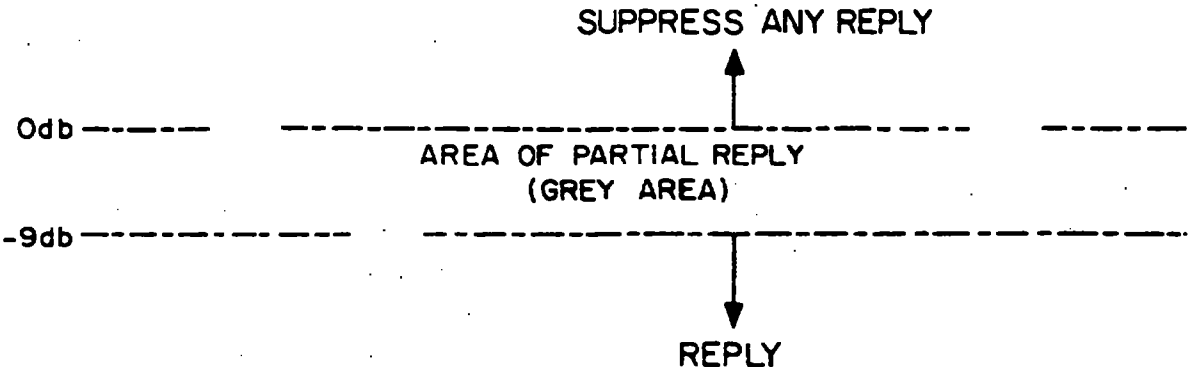


**FIGURE 4-4 CONDITION OF REPLY AND SIDE LOBE SUPPRESSION**

The KT 76A/78A Transponder replies to both the Mode "A" and Mode "C" interrogations with a coded pulse group on a carrier of 1090 ± 3 MHz. In a Mode "A" reply, the coding of the pulsed waveform represents an identification number of the plane carrying the transponder. The identification number which will be transmitted is inserted in the transponder by means of the code switches. This number consists of four octal digits (0-7) which gives the transponder the capability of 4096 different identification numbers. The coding of a Mode "A" reply can consist of up to fifteen pulses. Twelve of these pulses carry the identification number. Two others, called the framing pulses, come before and after the twelve information pulses. The last is a special identification pulse to aid the radar operator. The control head identification numbers and the reply coding characteristics for the full 15 reply pulses are shown in **Figure 4-5**.

| A | B | C | D |
|---|---|---|---|
| 7 | 7 | 7 | 7 |

**FIGURE 4-5A CONTROL HEAD IDENTIFICATION NUMBERS**

| A | A1 | A2 | A4 |
|---|---|---|---|
| 0 | 0 | 0 | 0 |
| 1 | 1 | 0 | 0 |
| 2 | 0 | 1 | 0 |
| 3 | 1 | 1 | 0 |
| 4 | 0 | 0 | 1 |
| 5 | 1 | 0 | 1 |
| 6 | 0 | 1 | 1 |
| 7 | 1 | 1 | 1 |

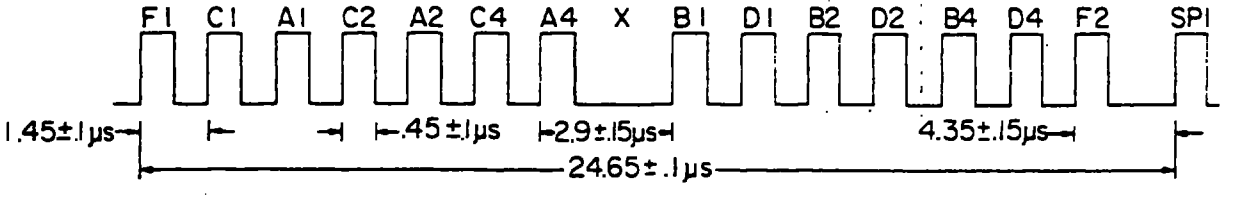


**FIGURE 4-5B REPLY CODING CHARACTERISTICS**

## 4.2 GENERAL CIRCUIT THEORY (FIGURE 4-7)

The block diagram shows the interconnections of the functional parts of the KT 76A/78A. The block diagram, as well as the schematics for each section, are located in the back of this manual and may be folded out and used with the following without flipping pages back and forth.

### 4.2.1 RF SECTION

Interrogation pulses from the SSR are received at the transponder and are directed through the Low Pass Filter and Duplexer to the 1030 MHz Bandpass Filter and Mixer. Here, it is mixed with the Local Oscillator (LO) output and inserted in the IF amplifier. The LO frequency is mixed with the 1030 MHz received signal, gives an IF frequency of 60 MHz. (70 MHz for serial numbers ≥ 110,000).

### 4.2.2 IF AMPLIFIER

The IF Amplifier takes a signal input over a dynamic range of 50 dB and compresses the video output to a dynamic range of 15 dB. This is accomplished by successive detection of the amplified IF signal. A second input to the IF Amplifier is the output from the Automatic Overload Control (AOC). This input line reduces the gain of the IF in an overload condition, so that only a specific portion of the interrogations received causes a reply.

### 4.2.3 VIDEO AMPLIFIER

The detected video output from the IF is amplified in the Video Amplifier.

### 4.2.4 NOISE SUPPRESSION CIRCUIT

The Noise Suppression Circuit rejects any pulse with a width less than 0.3 seconds. This circuit is located inside the LSI for serial numbers ≥ 110,000.

### 4.2.5 DITCH DIGGER AND VIDEO SWITCH

The Ditch Digger and Video Switch circuits function together in comparing the amplitude of P1 and P2. As explained in 4.1, this is to determine if the interrogation is from the main beam of the radar or a side lobe. The Ditch Digger produces a linearly rising voltage behind P1 into which P2 falls. The characteristics of the ditch are such that if P2 $\geq$ P1 then the Video Switch is triggered by P2, but if P2 operation of these circuits.

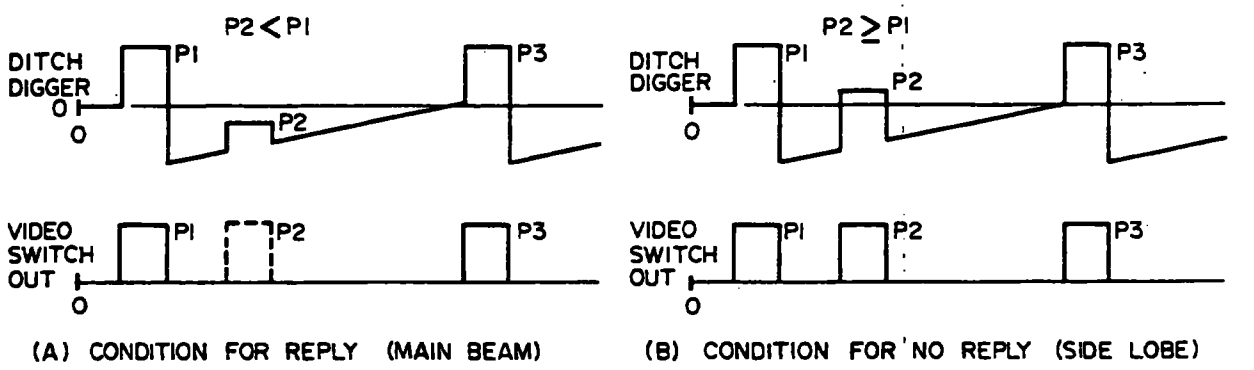


For serial numbers ≥ 110,000, P1 is sampled with an analog switch and compared with P2 directly.

**FIGURE 4-6 DITCH DIGGER AND VIDEO SWITCH**

### 4.2.6 ONE-SHOT BUFFER

The output of the Video Switch is a narrow pulse of about 150 us. The output of the one-shot is a pulse of about 1 sec for input to the LSI chip. (For serial numbers less than 110,000 only).

### 4.2.7 LSI CHIP

The King Transponder LSI chip performs many of the logic and timing functions of the unit. These include the following:

1. The decoding of P1 to P3 spacing for either a Mode "A" (8 us) or Mode "C" (21usec) reply.
2. Suppression of reply if P2 is present.
3. The encoding of the serial pulse train output for either mode.
4. Insertion of the SPI or ident pulse in the serial output. When the Ident button is pushed, the Ident pulse is included in all replies for an internally timed period of 23 seconds.
5. When power is first applied, all replies are suppressed for a period of 47 seconds. This turn-on delay also occurs whenever power is interrupted for more than 5 us.
6. The annunciate output drives the REPLY light. This output goes high for 760 ms whenever the transponder sends a reply. Additionally, it goes high continuously for the 23 second period following a low on the Ident input.
7. Mode "C" replies consist of framing pulses only when $\overline{ALT}$ $\overline{EN}$ is high.
8. When the $\overline{STBY}$ pin is low, the chip ignores the serial input line.

### 4.2.8 CLOCK

The LSI chip timing is derived from a 22.069 MHz. crystal oscillator. This frequency is divided by eight to provide a two phase clock at 2.75862 MHz. This divider is reset following an interrogation to synchronize the reply with the interrogation. For serial numbers ≥ 110,000, the 48 MHz. LO drives the LSI.

### 4.2.9 AUTOMATIC OVERLOAD CONTROL (AOC)

The external suppression output of the LSI chip is a pulse which is output during each reply. These pulses are averaged and used to sense an overload condition. The receiver is desensitized to limit the reply rate to approximately 1200 replies per second.

### 4.2.10 REPLY LAMP DRIVER AND AUTOMATIC DIMMING

This circuit switches the reply lamp on and off for each time the ANNUNCIATE line from the LSI chip goes high. A cockpit light level sensor automatically dims the reply lamp for lower cockpit lighting levels. Additionally, placing the function switch in the TEST position turns on the REPLY light.

### 4.2.11 MODULATOR AND TRANSMITTER

The modulator takes the coded serial data and switches the transmitter cavity on and off accordingly. The oscillator RF output passes through the low-pass filter to the antenna where the power is radiated. The purpose of the low pass filter is to attenuate higher harmonics of the 1090 MHz transmission.

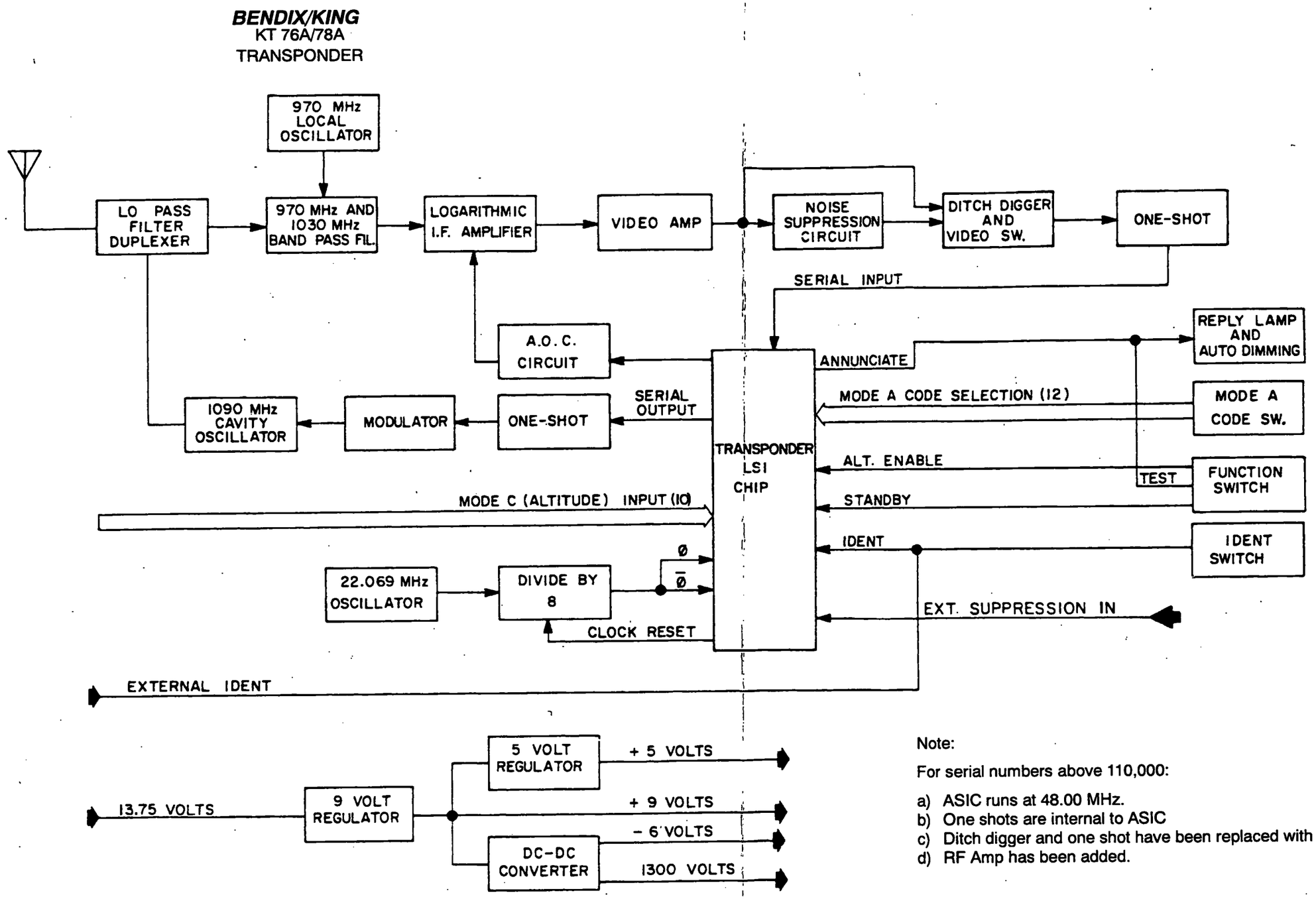


Note:

For serial numbers above 110,000:

a) ASIC runs at 48.00 MHz.
b) One shots are internal to ASIC
c) Ditch digger and one shot have been replaced with an analog switch.
d) RF Amp has been added.

**FIGURE 4-7 KT 76A/78A BLOCK DIAGRAM**

## 4.3 DETAILED CIRCUIT THEORY (S/N BELOW 110,000)

The following section discusses detailed circuit theory for units with serial numbers below110,000. Refer to the main board schematic of your specific unit version for circuit diagrams.

### 4.3.1 RF SECTION

The complete radio frequency section of the KT 76A/78A is incorporated in a die-cast chassis assembly. The functions the assembly accomplishes are:

1. Transmitter harmonic rejection
2. Input-output duplexing
3. Receiver front-end selectivity
4. Local Oscillator filtering and injection
5. Signal and Local Oscillator Mixing

An equivalent circuit diagram for the RF section is shown in **Figure 4-8.**

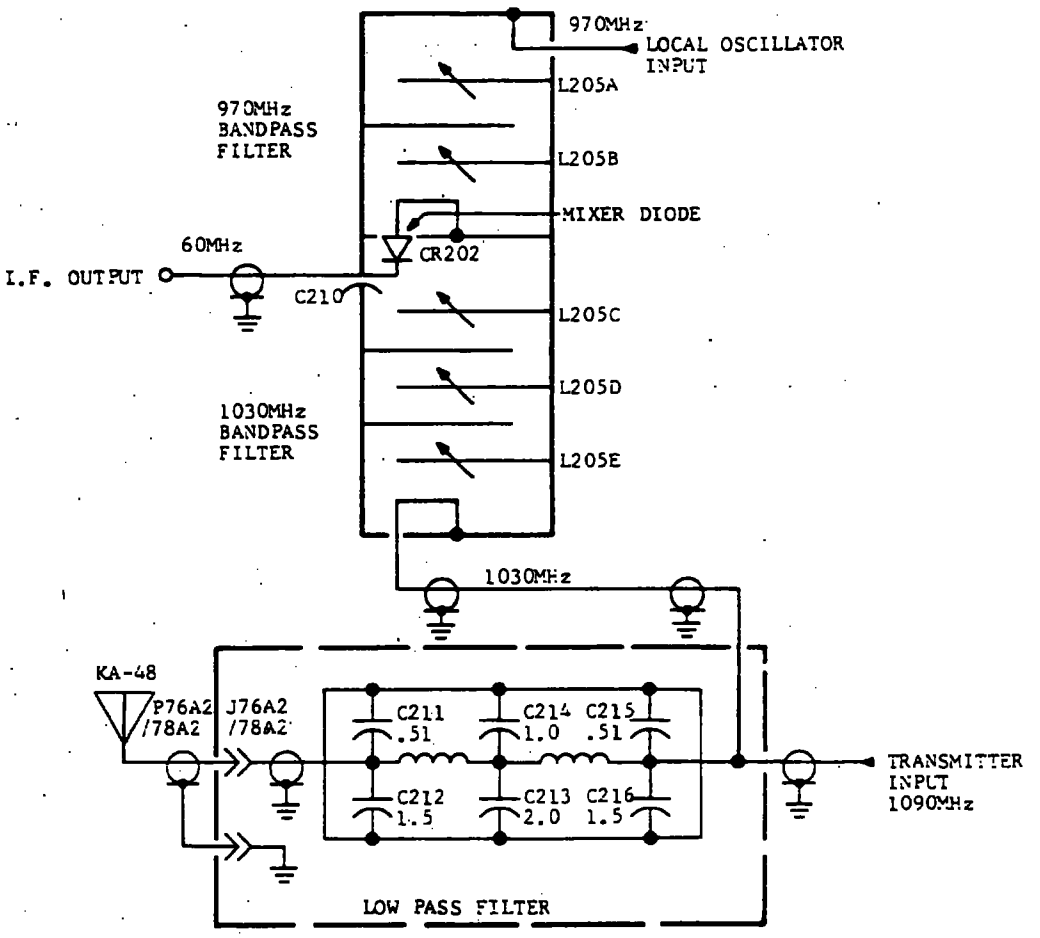


**FIGURE 4-8 RF EQUIVALENT CIRCUIT**

The harmonics of the transmitter output are filtered by means of the 1030 MHz low-pass filter. The characteristics of this filter are such that the second harmonic of the transmitter frequency (2180 MHz) is attenuated by more than 45 dB. Isolation between the transmitter output and the mixer diode, as well as receiver front end is accomplished by a 1030 MHz Bandpass Filter. This filter passes the received signal of 1030 MHz from the antenna to the mixer diode, but greatly attenuates the transmitter frequency of 1090 MHz. The filter characteristics are shown in Figure 4.9.

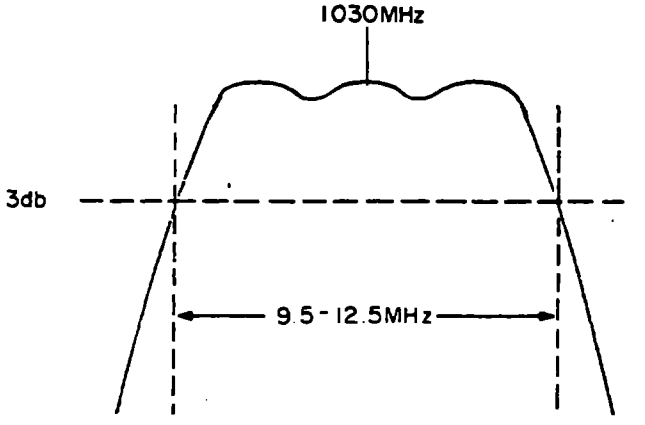


**FIGURE 4-9 1030 MHZ BANDPASS FILTER CHARACTERISTICS**

The local oscillator output is filtered by a 970 MHz Bandpass Filter. This filter is used to separate the Local Oscillator (LO) frequency from other harmonics of the frequency multiplier input (LO).

The filtered LO injection and the 1030 MHz signal from the bandpass filter are mixed by CR202, after passing through appropriate matching networks. The mixed difference frequency is passed on to the IF while the remaining components are by-passed to ground by C210.

### 4.3.2 LOCAL OSCILLATOR

The local oscillator consists of a 138.5714 MHz crystal controlled Colpitts Oscillator and a X7 varactor multiplication circuit. The 138.5714 MHz oscillator is in a grounded base configuration. Frequency control is accomplished by using a crystal (Y201) as a series tuned circuit in the emitter-to-collector feedback loop. This accomplishes the desired frequency stability. R201, R202 and R203 are the dc biasing elements of Q201. AC isolation of the oscillator from the 9.0 V supply is accomplished by the low-pass filter C204, L205 and C201.

Q202 and its associated circuitry function as a buffer amplifier which isolates the varactor diode multiplier from the 138 MHz oscillator stage. The 138.5714 MHz energy coupled from the buffer is applied to varactor diode CR201. The varactor diode is self-biased by current flow through R208 during a small portion of the negative swing of each RF cycle. A 2.2 pf capacitor and the inductor wound on its lead (FL201) series resonate at 970 MHz and allow only the 970 MHz RF component to be coupled to the bandpass filter.

### 4.3.3 IF AMPLIFIER

The IF Amplifier in the KT 76A/78A Transponder consists of four stages of amplification. The last three stages also provide detected video output. all four stages are synchronously tuned and produce a 5 MHz bandpass characteristic.

L402 and R409 at the IF input form a ground return for the DC mixer diode current. Inductor L402 functions as a radio frequency choke to decouple R409 from the 60 MHz IF input.

The AOC line provides base bias for the first stage and is filtered by C412, R406 and C413. Under normal interrogation rates, the AOC voltage is at 1.8V. During an overload condition this voltage decreases to reduce the gain of the first stage. The 9.0V supply lead is RF decoupled by a low-pass filter consisting of C411, R410, C419, R416, C424, R421 and C429.

Filtering of the collector supply for the second stage is accomplished by a low-pass filter consisting of R413 and C422. R418 and C427 provide filtering of the collector supply for the third stage and R423 and C432 for the last stage.

The IF input signal is coupled to the first stage by C414. In the collector circuit of the first stage is a resonant tank circuit consisting of the secondary of T402 and C418. Energy is taken from the secondary of T402, to provide impedance matching, and coupled to the second stage by C420. Across the primary of T402 is a load resistor, R412. The function of this resistor is to lower the Q of the resonant circuit, widening the bandpass characteristics.

The collector circuits of the following three stages are identical to the first stage. In addition to amplifying and providing selectivity, the last three stages detect the IF signal to obtain the video output. The method of detection is called successive detection. Overall IF gain is sufficient to develop large signal and noise amplitudes in CR403, the first detector. The resulting output is nearly linear and increases until Q407 saturates. The second video detector to contribute to the output is the base emitter diode of Q407. This video output will increase until Q406 saturates. At this point, the third detector, the base emitter diode of Q406, begins to contribute to the detected video. The fourth detector is the base emitter diode of Q405. The total output is compressed to approximately 3db of video change for each 10db of RF change, over at least a 50db range from MTL.

C421, C426, L403, C431, L404 and C434 accomplish interstage decoupling at the IF signal frequency, but provide a common output line for the detected video signals.

### 4.3.4 VIDEO AMPLIFIER

The Video Amplifier is used to amplify the video output from the IF amplifier. Power to the Video Amplifier is obtained from the 14.O V, 9.0 V, and -6.O V supplies. The 14V is filtered by the low pass filter consisting of R429 and C440.

A pulse on the output of the Video Amplifier is translated to TTL logic levels by Q411. When the collector of Q411 goes low, C448 discharges through R446. After this time delay, the I403 one-shot is triggered. The negative-going pulse at I403 pin 1 is inverted by I404D. R437 couples the output of the Video Amplifier to the ditch circuit, but when I404 pin 8 is low, the one-shot pulse therefore allows only the middle portion of the video through to the ditch circuit, providing rejection against narrow noise spikes.

### 4.3.6 DITCH DIGGER AND VIDEO SWITCH

The ditch digger and video switch waveforms are shown in **Figure 4-10**. When a positive video pulse appears at the emitter of Q413, it charges C438. This charging current flows through CR405

and causes a voltage drop across R436. The idle current through R436 is balanced out in I201 by the drop across R463. Q412 functions as a constant current source which charges C438 at a linear rate. I401 is a high speed differential comparator which translates the low level ditch output to TTL logic levels.

I404E and I404F and the associated components function as a one-shot multi-vibrator to provide a constant (nominally one microsecond) pulse at a 9 volt level for input to the LSI chip for decoding.

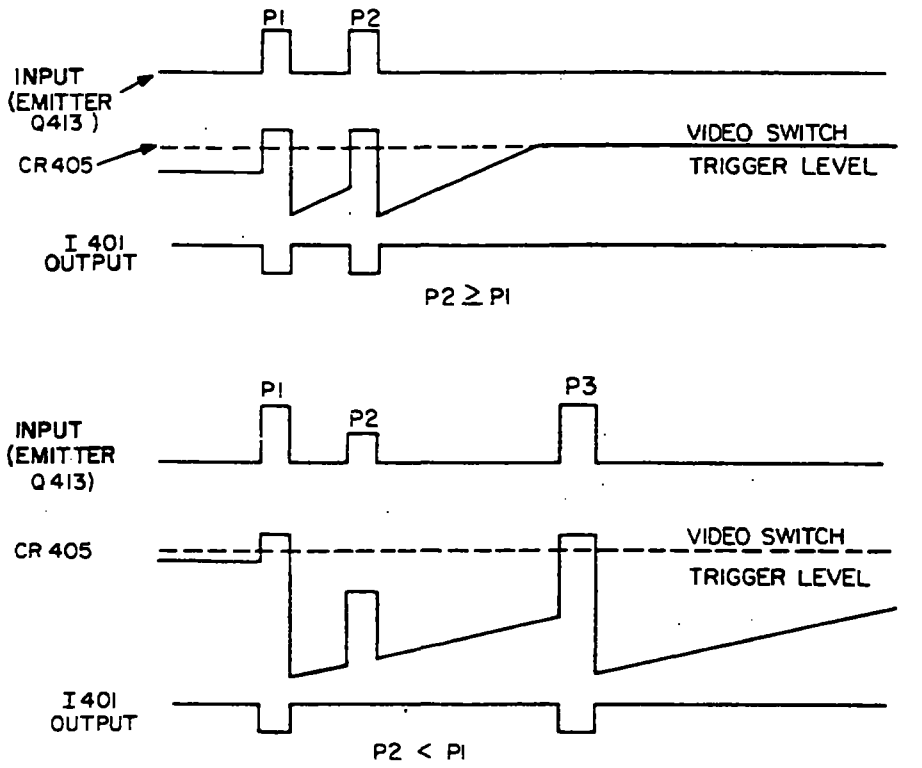


**FIGURE 4-10 DITCH DIGGER AND VIDEO SWITCH WAVEFORMS**

### 4.3.7 AOC LIMIT

The External Suppression output (I405 pin 13) is applied to the Automatic Overload Control. Q414 is in the OFF state for low reply rates and the output voltage is approximately 3 volts.

The input circuit integrates the number of replies/s by charging C437 through R445 during a reply and discharging C437 through R444 during the time that the reply gate is low. As the number of replies/s increases, the average voltage on the base of Q414 will finally reach the full ON state decreasing the IF bias voltage.

As the bias voltage on the base of the first IF stage is lowered, the gain of the IF is decreased. The transponder sensitivity is subsequently lowered to the point that the number of detected interrogations is limited.

### 4.3.8 REPLY LAMP DRIVER AND AUTOMATIC DIM

The automatic dim circuit controls the amount of voltage on the reply lamp DS301. The light sensor controls the base voltage of Q301 and as the light intensity increases on the light sensor, the voltage is increased at the base of Q301. The reply lamp glows brighter as the emitter voltage of Q301 increases. A ground is supplied when either the test switch is activated or when Q403 is turned on by the Annunciate output of the LSI chip.

### 4.3.9 MODULATOR

The Modulator one-shot (I402)is driven by the Serial Output, pin 3 of I405. The negative going pulse at pin 3 of I402 triggers a pulse output whose width is determined by R472 and C453. The Q and Q not outputs are used to drive the transistors Q417 and Q418 in push-pull to provide an active drive for the modulator transistor, Q419.

### 4.3.10 CAVITY OSCILLATOR

The Cavity Oscillator employs a triode vacuum tube to generate the necessary RF Power. Two manufacturers supply the cavity oscillator used in the KT 76A/78A.

Both the KT 76A/78A have a +1300 volt supply to operate the RF cavity. The KT 76A has a minimum of 200 watts peak power output while the KT 78A has a minimum of 113 watts peak power output.

All units have a RF adjustment and require 6.3 volts on the filaments. The transmit frequency is 1090 MHz $\pm$ 3 MHz.

The oscillator is modulated by Q419 on the cathode and the transmit pulse width is set at 0.45us.

### 4.3.11 CLOCK CIRCUIT

The clock inputs, I405 pins 7 and 8, are the master timing for the transponder LSI chip. The P1 to P3 decode spacing, as well as the output pulse repetition rate are governed solely by these inputs.

Q421 and the adjacent circuitry is a single stage 22.069 MHz crystal oscillator. Y401 effectively grounds the base at the series resonant frequency of the crystal while L406, C461 and C462 resonate on the third overtone.

I406 is a synchronous four stage counter. It is used in this application in a resettable divide-by-eight mode. This results in a clock frequency of 2.758625 MHz for the LSI chip. Following a valid decoding of an interrogation, the counter is reset by Q422. This synchronizes the transponder reply with the asynchronous ground interrogation.

The LSI chip needs a two phase clock at a nine volt level. I404A, I404B and I404C provide this inversion and level translation.

### 4.3.12 9 AND 5 VOLT REGULATORS

The +13.75VDC line voltage is applied to the 9.0 volt regulator through the filter L405, C464, C451 and C410. The Darlington pair, Q415, is used to regulate the 9.0 volt output. The zener diode CR407 serves as a reference voltage (6.2 volts) while R460 adjusts the bias current into the base of Q416 and in turn the 9.0 volt output. A regulated 5.0 volt output is provided with R458 and CR414 from the 9.0 volt line.

### 4.3.13 DC-DC CONVERTER

The DC-DC Converter is pre-regulated by the 9.0 volt line. Power is supplied through the filter, L401 and C409. The filter isolates the regulated 9.0 volt line from the converter frequency (4KHz to 5KHz).

The -6.0 volt supply is half wave rectified from one side of the converter by CR415. R478 drops the voltage from -9.0 volts to -6.2 volts and C449 provides filtering. Transformer T401 has three windings. Primary power is supplied from the collectors of Q401 and Q402 while the feedback winding provides the proper voltage and phase to the bases of Q401 and Q402 to sustain oscillation. The secondary is a single winding, providing 650 volts to the half wave voltage doubler CR401 and CR402. C401, C402 and C403 provide filtering and voltage doubling while R401 discharges the capacitors by leakage when the converter is turned off.

## 4.4 DETAILED CIRCUIT THEORY (S/N ≥ 110,000)

The following section discusses detailed circuit theory for units with serial numbers ≥ 110,000. Refer to the main board schematic (200-09070-0000) for circuit diagrams.

### 4.4.1. POWER SUPPLY

The power supply is shown on page 1 of the schematic. Q2 switches the AC power on when the gate is grounded. U23 is a linear regulator which provides 6 volts to the tube heater and also power some of the RF circuits. U6 is a linear regulator which provides 5 volts to the digital circuits. The -6 volts is generated by rectifying the 20 kHz signal from the input side of the high voltage transformer. CR2 is to keep the -6 Volts supply from going positive under fault conditions. Sheet 2 of the schematic shows the high voltage section of the power supply. The Aircraft power is 1st preregulated to 9V. This 9V is also used for Receiver circuits after RC filtering. U12-B is a 40 kHz oscillator which is divided by 2 to produce a 50% duty cycle 20 kHz. Q1 and Q3 drive the transformer primary in push pull fashion. The high voltage produced is voltage doubled with C43, C44, CR7, CR8 and filtered with C45. The resistor ladder network acts as a bleeder load and also divides down the 1300 volts to compare to a voltage reference. U13 amplifies any error and applies feedback to the 9V regulator. U6 is a linear regulator that provides +5V for the digital circuits.

### 4.4.2. LOCAL OSCILLATOR

The Local Oscillator is shown on page 3 of the schematic. The 48 MHz oscillator consists of Y1 and Q4. Q5 buffers the signal which is feed to the ASIC. The 48 MHz is squared up with U15-A. U17-A provides the proper DC bias to the input of U15. The 48 MHz square wave which is rich in harmonics is feed into a 240 MHz filter to select the 5th harmonic. This signal is amplified U19

and 4th harmonic is selected by filter FL2. The 960 Mhz signal is amplified to approximately -10 dbm by U22.

4.4.3. RF AND IF

The RF and IF amps are shown on page 4 of the schematic. FL1 is the 1030 MHz preselector. U20 is the RF amp and supplies approximately 17 db of gain. The signal is goes through an 8 db pad before being presented to the mixer U21 where it is combined with the 960 MHz LO. The output of the mixer is 70 MHz. The signal is filtered with an LC network before presented to the IF amplifier. The 5 transistor IF amplifier both amplifies and detects the IF signal. The detected signal is logarithmic in nature. It is amplified by the video amp consisting of Q18 and Q17. Q14 and Q15 provide the correct bias for the video amp so that the output of the amplifier is close to ground potential under no-signal conditions.

4.4.4. VIDEO DETECTION

The output of the video amp is detected with circuits on page 5 of the schematic. Comparator U14-A switches when the video signal is above approximately .3 volts. U12-D and Q10 increase this switching threshold voltage if the transmitter is replying at a level exceeding 1400 replies per second. The height of P2 is compared to height of P1 using a sample and hold circuit consisting of switch U16, hold capacitor C93 and comparator U14-B. If the height of P2 is 9 db below P1, The output of U14-B will be low during P2. If P2 is equal to P1 the U14-B will be high during P2. The transponder must not reply if P2 is equal to P1.

4.4.5. ASIC

The ASIC contains the digital logic to generate a reply based on the input pulses supplied by the U14 dual comparator. It makes sure the pulses are of the proper with and spacing for a legal mode A or mode C transponder. It takes in parallel altitude lines and front panel switch information. The 4 digit switch code is used for a Mode A reply and the altitude lines are used for mode C. The ASIC logic is a CMOS ram design and therefore must be loaded on power up by serial EPROM U5. The ASIC will not load until comparator U4 indicates that the power supply is stable. Q9 supplies the drive to the cathode of the tube.

The lines listed below are the major inputs, outputs and test outputs of the ASIC.

ASIC Inputs

| Pin | Pin name | Description |
|---|---|---|
| 5 | MTL video in | Any video signal above MTL will cause this line to go low |
| 6 | P2 Video in | If P2 is equal in height to P1 this signal will be high<br>If P2 is 9db less than P1 this signal will be low |
| 10 | ASIC 48 MHz in | ASIC clock signal |
| 74 | Configuration Mode | ASIC will begin configuration at power up when this line goes high |
| 32 | Configuration Clock | ASIC will clock configuration data out of eprom at power up |
| 8 | Edge input | A high indicates the leading edge of pulses greater than 50dbm. |
| 83 | External Suppression | A high will suppress the transponder replies. |

ASIC Outputs

| Pin | Pin name | Description |
|---|---|---|
| 1 | 8 MHz Clock | This signal is the 48 MHz clock input divided by 6. |
| 77 | Modulation | This signal goes high to modulate the transmit tube. A high is ON. |
| 76 | TX inhibit | This line is low during the 45 second warm up period |
| 3 | Pulse Detection | This test output goes high when a pulse is detected. This line is a<br>function of MTL video, P2 video, and the suppression input. |

### 4.4.6. ALTITUDE AND SUPPRESSION INPUTS

The altitude and suppression inputs are buffered by comparators on page 7. The high input impedance offers protection and limits the amount of EMI which can be passed to the outside of the box. Diode decoupling is used so that the pullups inside the transponder will not be seen by other aircraft equipment. The external suppression is AC coupled so that a DC fault condition will not prevent the Transponder from replying. The switching level of the inputs is approximately 5 volts.

# SECTION V

# MAINTENANCE

## 5.1 GENERAL

Before maintenance of the KT 76A/78A is attempted, a thorough understanding of the Theory of Operation (Section IV) as well as the information of semiconductor maintenance is needed. This material is found in Appendix A. Detailed information on the various integrated circuit packages is also found in this reference.

## 5.2 TEST AND ALIGNMENT

### 5.2.1 TEST EQUIPMENT

The transponder test set-up is shown in **Figure 5-1**.

| DESCRIPTION | | CHARACTERISTIC REQUIRED | REPRESENTATIVE TYPE |
|---|---|---|---|
| 1) | Power Supply | 14.0 volts at 3 amps | |
| 2) | VTVM | High Impedance Meter | HP Model 410B |
| 3) | VOM | | Simpson Model 260 |
| 4) | Oscilloscope | Dual Trace<br>H-P 180A | Tektronix 454 |
| 5) | Line Stretcher | Constant Impedance<br>Adjustable 50 ohm line | Micro Lab/FXR<br>SR-05N |
| 6) | ATC Test Set | | HP 8925A |
| | a) Signal Generator | | HP HO1 8614A |
| | b) Modulator | | HP H01 8403A |
| | c) Frequency Counter | | HP 5245L |
| | d) Frequency Converter | | HP 5245A |
| | e) Isolator Monitor | | Boonton 13505A |
| | f) Wave Meter | | Boonton 8905A |
| | g) Peak Power Calibrator | | Boonton 8900B |
| | h) Interrogation Pulse | | Collins 578X-1 |
| | i) Crystal Detector | | HP423A |
| | | or | |
| 7) | Instrument Flight Research Corp. | | 1200Y3 or<br>1400A Preferred |

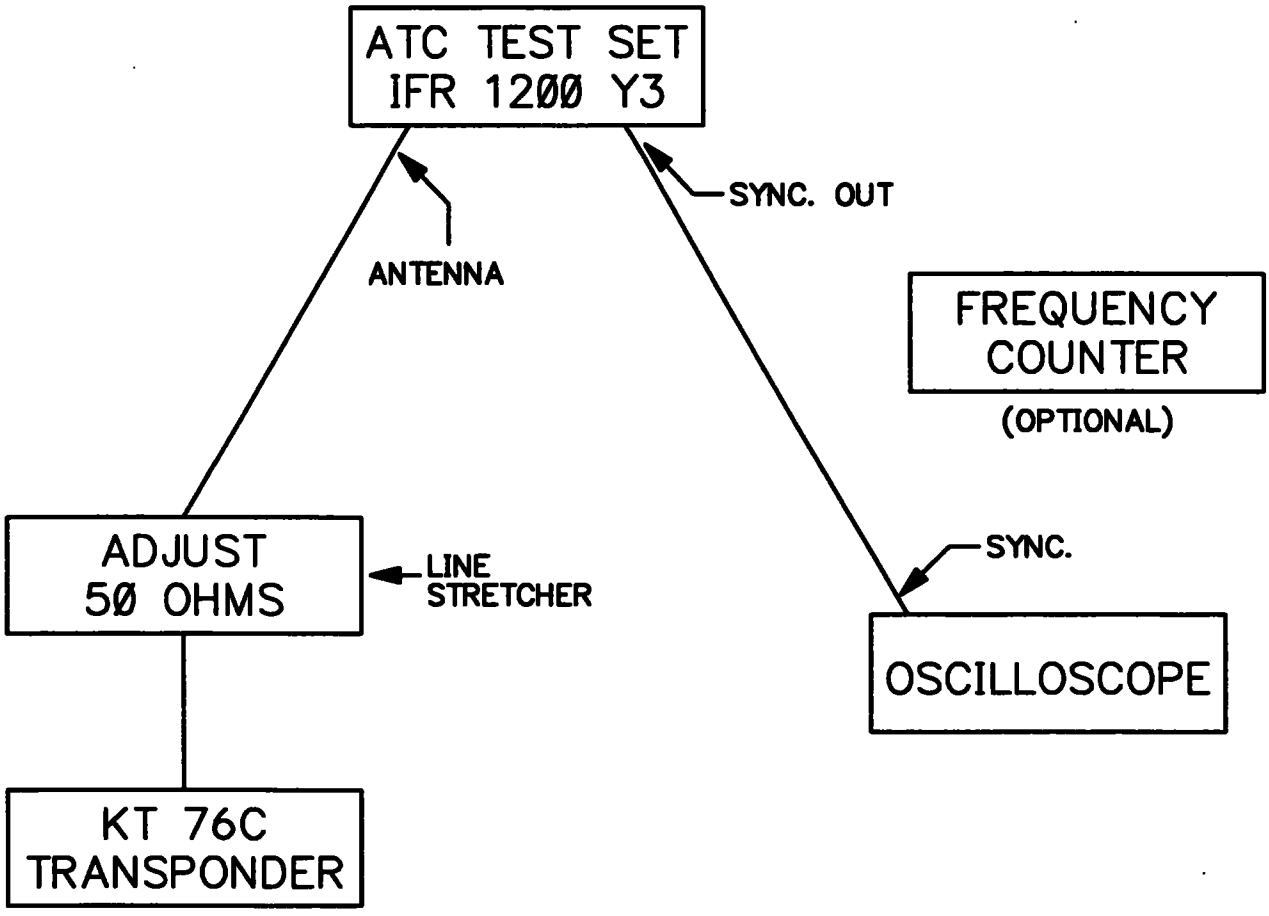


**FIGURE 5-1 COMPLETE ATC TEST SET-UP**

5.2.2 ALIGNMENT PROCEDURE

5.2.2.1 Units with serial numbers below 110,0000

A. <u>Power Supply</u>

1) Apply 13.75 volts dc to the unit, thru a 2 amp fuse.

**CAUTION**

UNIT NOT INTERNALLY FUSED (Units are fused if Main Board is -20 or higher)

2) Adjust R460 so that 9.0 $\pm$ 0.1 volts dc is obtained at the emitter of Q415.

B. Local Oscillator

1) Monitor the local oscillator injection voltage at TP405.

2) Spread L201 until the voltage reading is greater than 50mV.

**NOTE**

If oscillator drifts make sure that Y201 is secured to 073-00169-0003 casting.

3) Peak the diode voltage by alternately peaking the coil of FL201, L204, L203 and L202 to obtain the maximum voltage.

4) Peak L201 by stretching it slowly. Take the highest voltage reached before the oscillator died (should be between .18 and .33 volts) and subtract .03 volts. Compress L201 until that voltage is obtained. The final voltage should be between .15 and .30 volts.

C. 1030 MHz Bandpass Filter

1) Put the unit in standby.

2) Connect the scope probe to TP404. Set the RF level to approximately -50 dBm and the generator frequency to 1030.0 MHz.

3) Turn L205D CW until it bottoms on the back of the casting. When it bottoms, use a minimum of torque to prevent damage to the casting.

4) Observe the pulse peak, P1, at a scope sensitivity of 0.1 volts/cm (including the scope probe).

5) Alternately tune L205C and L205E for maximum P1 pulse height.

6) Turn L205D CCW and use the scope POSITION control to follow the peak of pulse P1. Tune L205D for a maximum pulse height.

7) After alignment is complete, check the L.O. drive level as outlined in B above.

D. I.F. Alignment

1) Set the RF level to -50 dBm and monitor TP404 with oscilloscope. Set the interrogation rate to 500/sec.

2) Tune T402, T403, T404 and T405 for maximum video output at TP404.

3) Reduce the RF level to -75 dBm and again tune T402, T403, T404 and T405 for maximum video output at TP404.

E. Transmitter Adjustments

1) Set the interrogation rate to 500 per second and the transponder code to 0000.

2) Adjust the RF coupling for maximum peak power. Decouple the RF by 10% of this maximum reading by rotating the RF coupling adjustment CCW.

3) Pull the line stretcher and note the maximum and minimum frequency deviation. Set the HP 8905 wave meter to center of the frequency deviation and pull the line stretcher until a peak indication is reached. Without moving the line stretcher, adjust the transmit oscillator frequency trim for a 1090 MHz reading. Recheck the frequency deviation by pulling the line stretcher to see that it is centered about 1090.0 MHz. Check to see that the collector voltage of Q419 does not exceed 140 volts as the line stretcher is pulled (Q9 for serial numbers ≥ 110,000).

4) Adjust R472 so that the first framing pulse is .45 ± .05µs wide (serial numbers < 110,000 only.

5.2.2.2 Units with serial numbers ≥ 110,0000

A. Main Board Alignment

1) Attach a scope probe to TP5. Verify interrogation signal is present.

2) Set RF amplitude to -20 dbm. Using the gain adjust pot, R165, adjust height of P1 to 4.25 ±.1 volts.

3) Adjust MTL pot, R132 so that the reply rate on the Test Set XPDR Reply % reads 90% ± 3%.

4) This completes Alignment of the Main Board.

B. Transmitter Adjustments

1) Using the transmitter tube coupling nut and frequency adjust screw, adjust the transmitter for peak power and a frequency of 1091 ± 1 MHz.

**NOTE**

If Circulator is INSTALLED, skip step 2. If Circulator is not INSTALLED, skip step 3.

2) Turn the coupling nut counter-clockwise until one of the following conditions occurs:

   a) The power drops 15%.

   b) The rise time drops to 55 ns.

   c) The pulse width increases to 520 ns.

**NOTE**

Decoupling the tube will decrease frequency "pulling" at installation time.

3) Decrease unit peak power from 1 to 5 percent by turning the coupling nut counter-clockwise.

4) Adjust the Frequency nut to bring back the frequency to 1090.75 ± .1 MHz. Verify that rise time is between 50 and 100 ns, power is greater than 200 watts, and pulse width is 450ns ± 70ns. If not, repeat the last two steps until all conditions are met.

5) Connect the unit under test to a line stretcher with a 1.2:1 SWR load. Adjust the line stretcher through all phase angles and verify the transmitter frequency is not less than 1087.5 MHz and not more the 1091 Mhz.

6) This completes alignment of the transmit tube.

## 5.2.3 TEST SPECIFICATIONS

### 5.2.3.1 PURPOSE

The following specifications are the minimum performance standards which all KT 76A/78A Transponders must meet.

## 5.2.4 MINIMUM PERFORMANCE UNDER STANDARD CONDITIONS

Ambient room temperature and pressure. Specifications are to be met after a 15 minute warm-up.

### 5.2.4.1 POWER SUPPLY

Power supply voltage shall be as follows:

| Rear Connector Pin | Voltage | Tolerance |
|---|---|---|
| N | +9 | ± 0.1 |
| 5 | +5 | ± 0.25 |

| Rear Connector Pin | Voltage | Tolerance |
|---|---|---|
| 6 | -6.2 | ± 0.5, -1.3 |
| Xmit Oscillator | +1350 | ± 100 |

5.2.4.2 TURN ON DELAY AND IDENT TIMER

The turn on delay shall be less than 60 seconds and the ident time shall be between 15 seconds and 30 seconds.

5.2.4.3 RECEIVER SENSITIVITY

The receiver shall reply to 90% of all interrogations at an interrogation signal of between -72 dBm and -79 dBm. This specification applies to both Mode "A" and Mode "C" interrogations.

5.2.4.4 DYNAMIC RANGE (P2 9 dB below P1)

The transponder shall reply to greater than 90% of all interrogations from MTL (minimum trigger level) to -20 dBm.

5.2.4.5 DECODING SPECIFICATIONS

The transponder shall not reply with greater than a 10% reply efficiency, to any interrogations whose pulse spacing is greater that ± 1μs from 8 or 21μs.

5.2.4.6 SIDE LOBE SUPPRESSION

The transponder shall not reply to more than 1% of the interrogations when P2 is equal to or greater than P1 and spaced 2.0 ± 0.15μs from P1. This standard applies from MTL +3 dB to -20 dBm.

5.2.4.7 TRANSMITTER POWER

The minimum peak power of the transmitted reply pulses shall be 200 watts for the KT 76A and 114 watts for the KT 78A. This test is performed at a reply rate of 500/sec of code 0000.

5.2.4.8 TRANSMITTER FREQUENCY

The frequency of the reply shall be 1090 ± 3 MHz. With a line stretcher and a 1.2:1 VSWR load pulling shall be less than 4 MHz total.

5.2.4.9 INFORMATION PULSES

The transponder shall provide 4096 codes of reply in Mode "A". It shall also provide the SPI pulse, in a Mode "A" reply when the ident feature is initiated. There will be ten (10) pulses available for Mode "C" operation. These pulses are A1, A2, A4, B1, B2, B4, C1, C2, C4, D4. A ground on each

of the Mode "C" input pins shall cause the corresponding pulse to be present in a Mode "C" reply. The relative spacing of the reply is as follows.

| PULSE | POSITION (us) |
|---|---|
| F1 | 0.00 (Reference) |
| C1 | 1.45 |
| A1 | 2.90 |
| C2 | 4.35 |
| A2 | 5.80 |
| C4 | 7.25 |
| A4 | 8.70 |
| B1 | 11.60 |
| D1 | 13.05 |
| B2 | 14.50 |
| D2 | 15.95 |
| B4 | 17.40 |
| D4 | 18.85 |
| F2 | 20.30 |
| SPI | 24.65 |

The pulse spacing of any information pulse must not differ from these spacings by more than ± 0.1us. The pulse spacing tolerance of any pulse in the reply group with respect to any other pulse (except the first framing pulse) must be no more than ± 0.15us.

### 5.2.4.10 OUTPUT PULSE WIDTH

The output pulse width shall be set to .45 ± .07 µs measured at the 50% voltage points on the detected video of the transmitter reply.

### 5.2.4.11 REPLY LAMP

The reply lamp shall be illuminated when the unit replies to an interrogation. The intensity of the reply lamp shall vary with the ambient light incident upon V301. The reply lamp shall be illuminated during the period the IDENT pulse is present in Mode "A" replies.

### 5.2.4.12 FUNCTIONS

The transponder shall not reply when the function switch is in the SBY position. Mode "C" replies shall consist only of framing pulses when the function switch is in the ON position. Mode "A" and/or Mode "C" data shall be transmitted when the function switch is in the ALT position. The REPLY light shall be illuminated when the function switch is in the TST position.

5.2.4.13 PANEL LIGHTING

With 14 V dc applied to pin 2 and ground on pin 3, both panel lamps (DS302 and DS303) shall be illuminated.

## FINAL TEST DATA SHEET

1. Power Supply (+9 ± 0.1; +5 ± 0.25; -6.2 +0.5; -1.3; 1325 ±100) ( )

2. Turn-on and Ident delays (Turn on 60 s) (Ident 15-30 s) ( )

3. MTL____ (-72 to -80 dBm) ( )

4. Dynamic Range (90% from MTL to -20 dBm) ( )

5. Decoding (less than 10% at ± 1 μs)

| Mode | Advance P3 | Retard P3 |
|---|---|---|
| A | ( ) | ( ) |
| C | ( ) | ( ) |

6. S.L.S. (Less than 1% reply, MTL +3 dB to -20 dBm, P2 = P1)

| Signal Level (dBm) | % Reply |
|---|---|
| MTL +3 dB | _____ |
| -60 | _____ |
| -50 | _____ |
| -40 | _____ |
| -30 | _____ |
| -20 | _____ |

7. Transmitter Power (KT 76A: 200 W Min) _____

   (KT 78A: 113 W Min)

8. Transmitter Frequency (1090 ± 0.5 MHz) _____

9. Reply Spacing ( )

   Mode "A" Code ( )

   Mode "C" Code ( )

10. Transmit Pulse Width (0.45 ± 0.07 μs) _____

11. Reply Lamp (Ident, Reply, Dimming) ( )

12. Functions (STBY, ON, ALT, TEST) ( )

13. Panel Lighting ( )

## 5.3 OVERHAUL

### 5.3.1 INSPECTION

This section contains instructions to assist in determining by inspection the condition of the KT 76A/78A. Defects resulting from wear, physical damage, deterioration, or other causes can be found by these inspection procedures. To aid inspection, detailed procedures are arranged in alphabetical order.

A. Capacitors, Fixed

Inspect capacitors for case damage, body damage, and cracked, broken, or charred insulation. Check for loose, broken, or corroded terminal studs, lugs, or leads. Inspect for loose, broken, or improperly soldered connections. On chip caps be especially alert for hairline cracks in the body and broken terminations.

B. Capacitors, Variable

Inspect trimmers for chipped and cracked bodies, damaged dielectrics and damaged contacts.

C. Chassis

Inspect the chassis for deformation, dents, punctures, badly worn surfaces, damaged connectors, damaged fastener devices, loose or missing hardware, component corrosion, and damage to the finish.

D. Connectors

Inspect connectors for broken parts, and other irregularities. Inspect for cracked or broken insulation and for contacts that are broken, deformed, or out of alignment. Also, check for corroded or damaged plating on contacts and for loose, improperly soldered, broken, or corroded terminal connections.

E. Covers and Shields

Inspect covers and shields for punctures, deep dents, and badly worn surfaces. Also, check for damaged fastener devices, corrosion and damage to finish.

F. Flex Circuits

Inspect flex circuits for punctures, and badly worn surfaces. Check for broken traces, especially near the solder contact points.

G. Fuse

Inspect for blown fuse and check for loose solder joints.

H. Insulators

Inspect insulators for evidence of damage, such as broken or chipped edges, burned areas, and presence of foreign matter.

I. Jacks

Inspect all jacks for corrosion, rust, deformations, loose or broken parts, cracked insulation, bad contacts, or other irregularities.

J. Potentiometers

Inspect all potentiometers for evidence of damage or loose terminals, cracked insulation or other irregularities.

K. Resistors, Fixed

Inspect fixed resistors for cracked, broken, blistered, or charred bodies and loose, broken, or improperly soldered connections. On chip resistors be especially alert for hairline cracks in the body and broken terminations.

L. RF Coils

Inspect all RF coils for broken leads, loose mountings, and loose, improperly soldered, or broken terminal connections. Check for crushed, scratched, cut or charred windings. Inspect the windings, leads, terminals and connections for corrosion or physical damage. Check for physical damage to forms and tuning slug adjustment screws.

M. Terminal Connections soldered

1. Inspect for cold-soldered or resin joints. These joints present a porous or dull, rough appearance. Check for strength of bond using the points of a tool.
2. Examine the terminals for excess solder, protrusions from the joint, pieces adhering to adjacent insulation, and particles lodged between joints, conductors, or other components.
3. Inspect for insufficient solder and unsoldered strands of wire protruding from conductor at the terminal. Check for insulation that is stripped back too far from the terminal.
4. Inspect for corrosion at the terminal.

N. Transformers

1. Inspect for signs of excessive heating, physical damage to case, cracked or broken insulation, and other abnormal conditions.
2. Inspect for corroded, poorly soldered, or loose connecting leads or terminals.

O. Wiring/Coaxial Cable

Inspect wiring in chassis for breaks in insulation, conductor breaks, cut or broken lacing and improper dress in relation to adjacent wiring or chassis.

5.3.2 CLEANING

A. Using a clean, lint-free cloth lightly moistened with soap and water only, remove the foreign matter from the equipment case and unit front panel. Wipe dry using a clean, dry, lint-free cloth.

B. Using a hand controlled dry air jet (not more than 15 psi), blow the dust from inaccessible areas. Care should be taken to prevent damage by the air blast.

C. Clean the receptacles and plugs with a hand controlled dry air jet (not more than 25 psi), and a clean, lint-free cloth lightly moistened with soap and water only. Wipe dry with a clean, dry, lint-free cloth.

### 5.3.3 REPAIR

This section describes the procedure along with any special techniques for replacing damaged or defective components.

A. Connectors

When replacing a connector, refer to the appropriate PC board assembly drawing and follow the notes to insure correct mounting and mating of each connector.

B. Crystal

The use of other than a Bendix/King crystal is considered an unauthorized modification.

C. Diodes

Diodes used are silicon and germanium. Use long nose pliers as a heat sink under normal soldering conditions. Note the diode polarity before removal.

D. Integrated Circuits

Refer to Appendix A for removal and replacement instructions.

E. Wiring/Coaxial Cable

When repairing a wire that has broken from it's terminal, remove all old solder and pieces of wire from the terminal, restrip the wire to the necessary length and resolder the wire to the terminal. Replace a damaged wire or coax with one of the same type, size and length.

### 5.3.4 DISASSEMBLY PROCEDURE

The unit is disassembled for maintenance and testing purposes by removing the four flat head screws on each side that fasten the chassis to the side rails. The faceplate can be removed by removing the four black flat screws that fasten it to the side rails.

## 5.4 TROUBLESHOOTING

This section is intended for use as a guide in isolating circuit malfunctions. The guidance presented here and the figures referenced by no means profess to include all possible causes of failure, but are presented as a guideline to be used in locating the approximate section of the unit that has failed. **Figure 5-2** is the KT 76A/78A Troubleshooting Flow Chart and is arranged in a manner that will expedite finding the area of failure. Following are the waveforms that should be found at various test points in the KT 76A/78A.

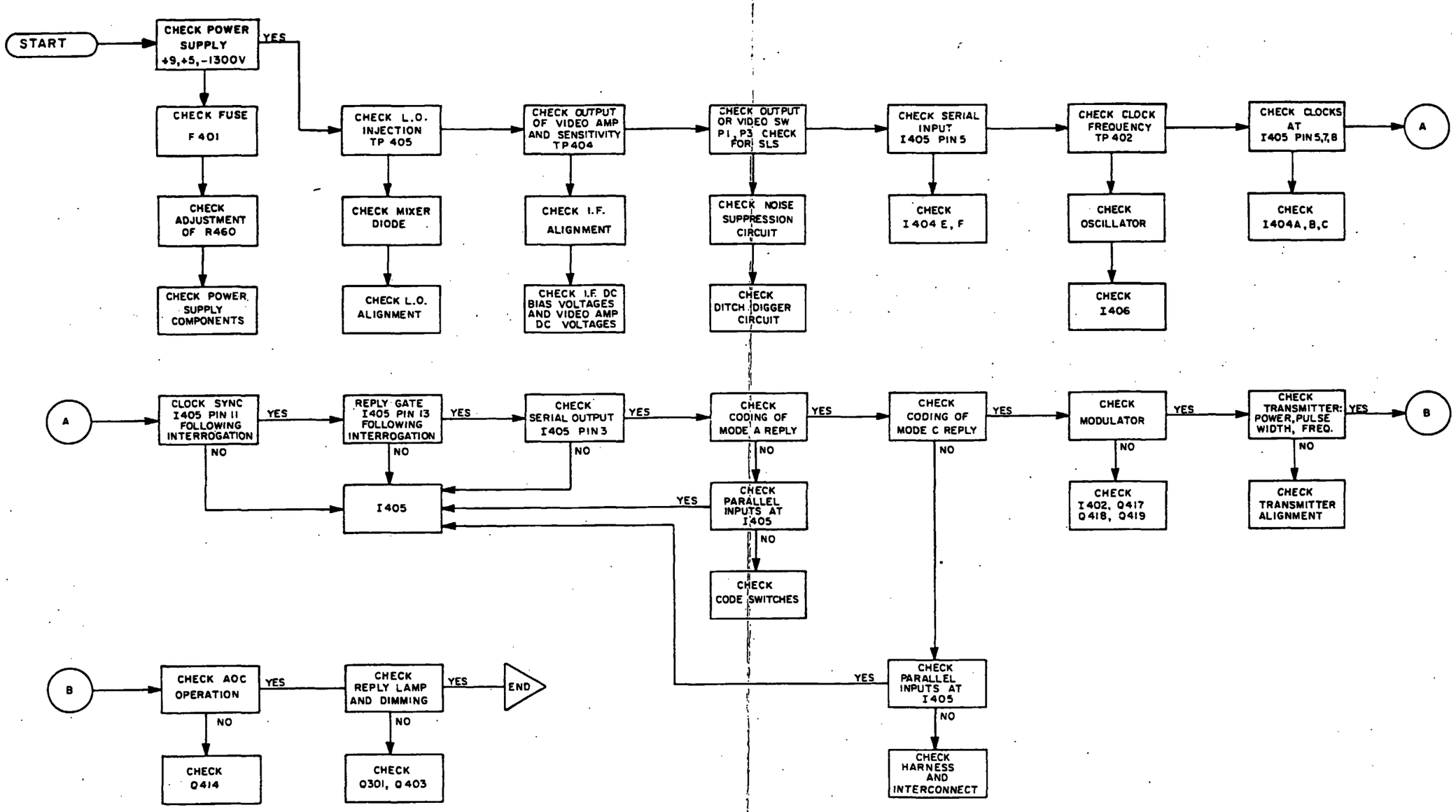


**FIGURE 5-2 KT 76A/78A Troubleshooting Flow Chart (S/N < 110,000)**

## KT76A General troubleshooting Flow Chart

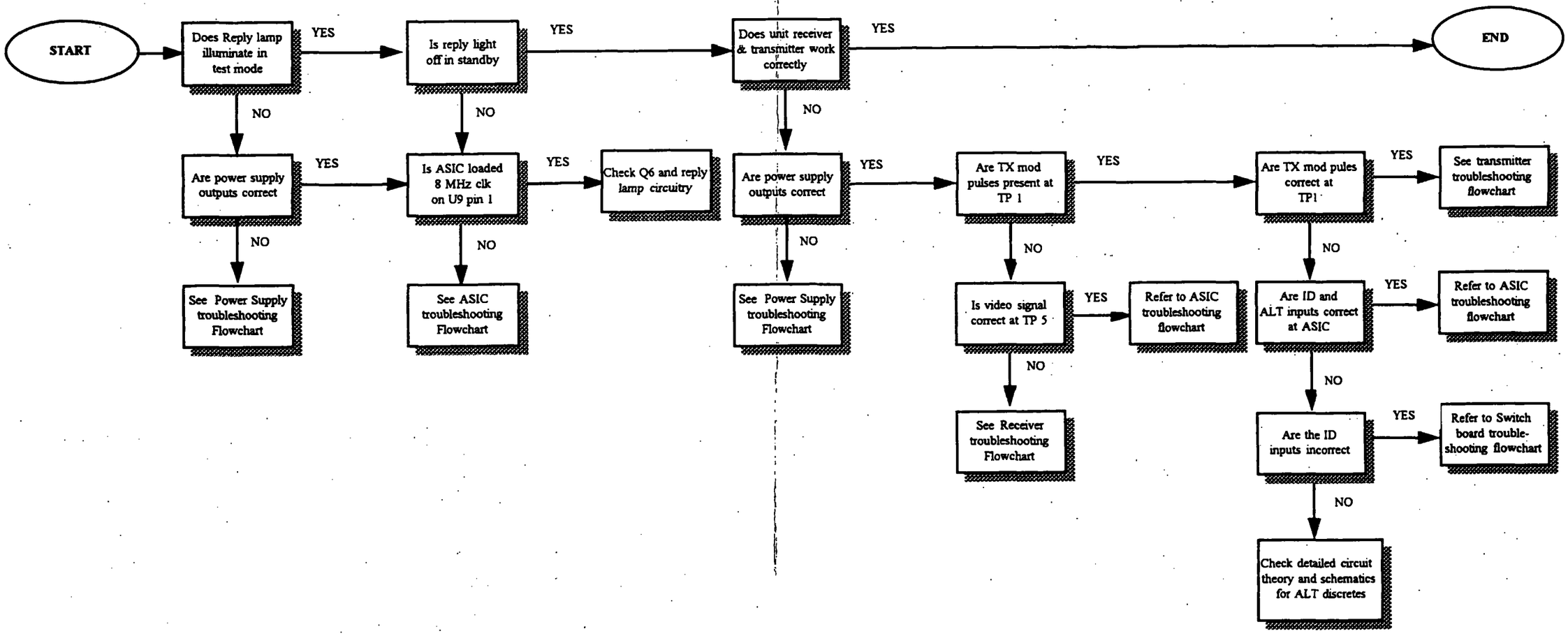


**FIGURE 5-3 KT 76A/78A General Troubleshooting Flow Chart (S/N ≥ 110,000)**

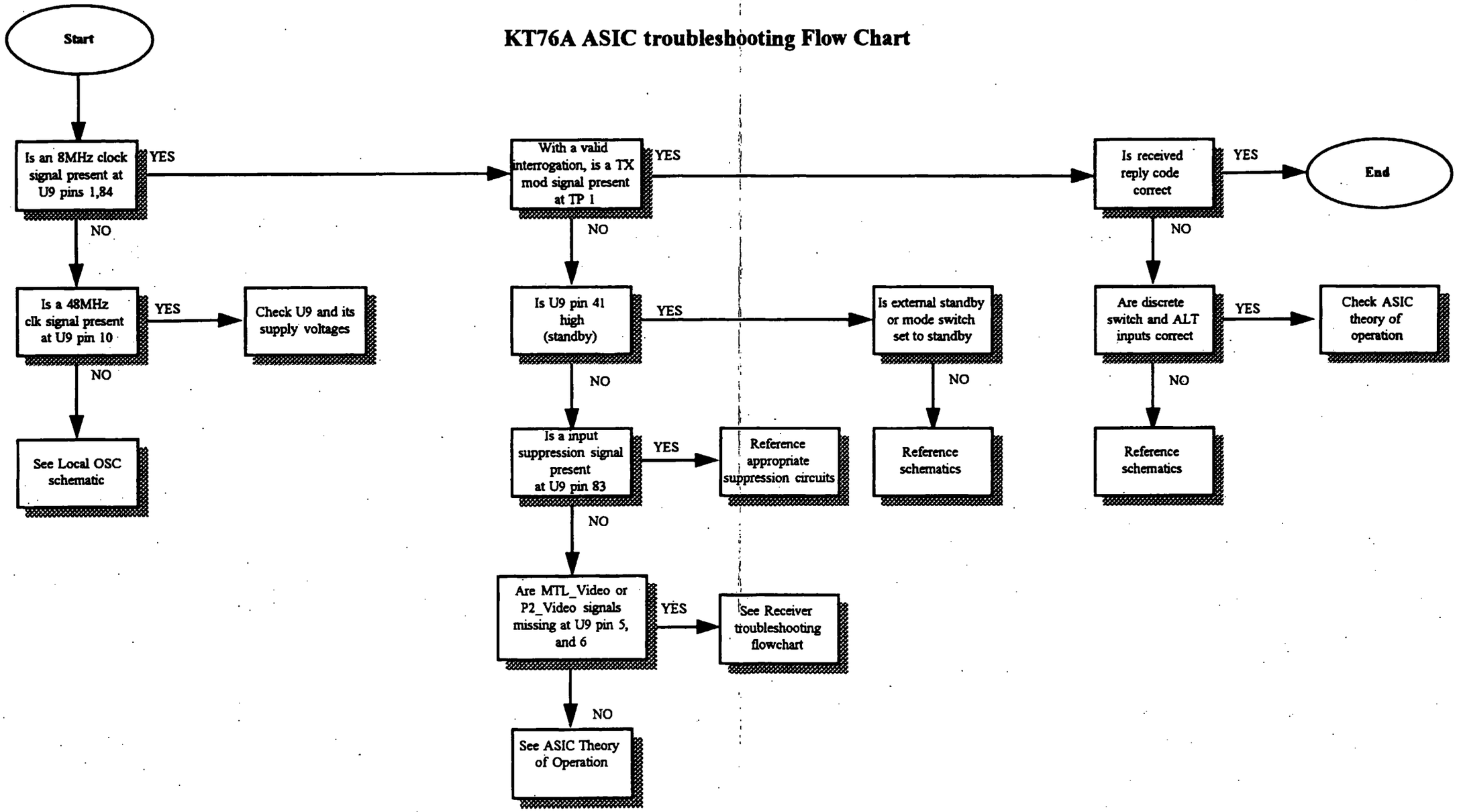


**FIGURE 5-4 KT 76A/78A ASIC Troubleshooting Flow Chart (S/N ≥ 110,000)**

## KT76A High Voltage Power Supply Flow Chart

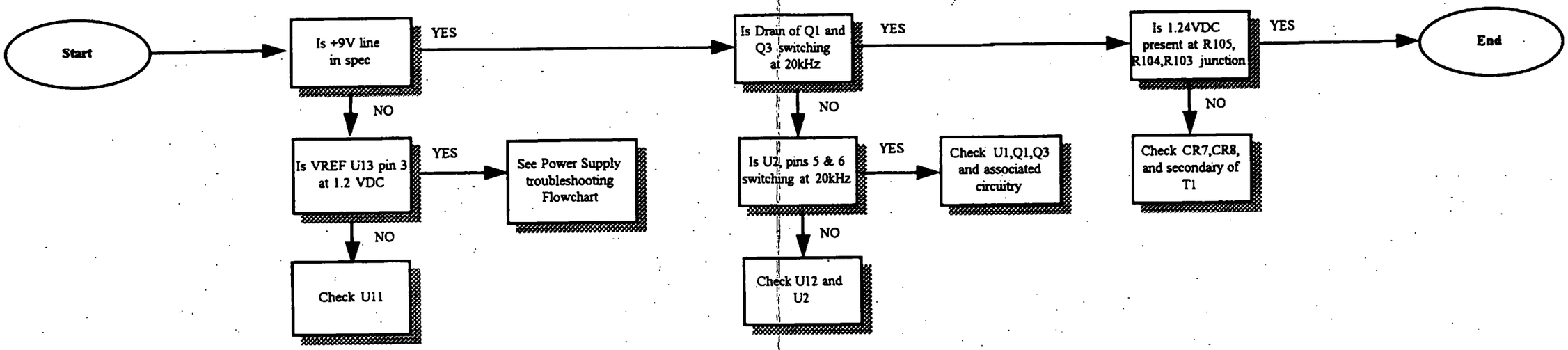


**FIGURE 5-5 KT 76A/78A H. V. Power Supply Troubleshooting Flow Chart (S/N ≥ 110,000)**

## KT76A Power Supply Flow Chart

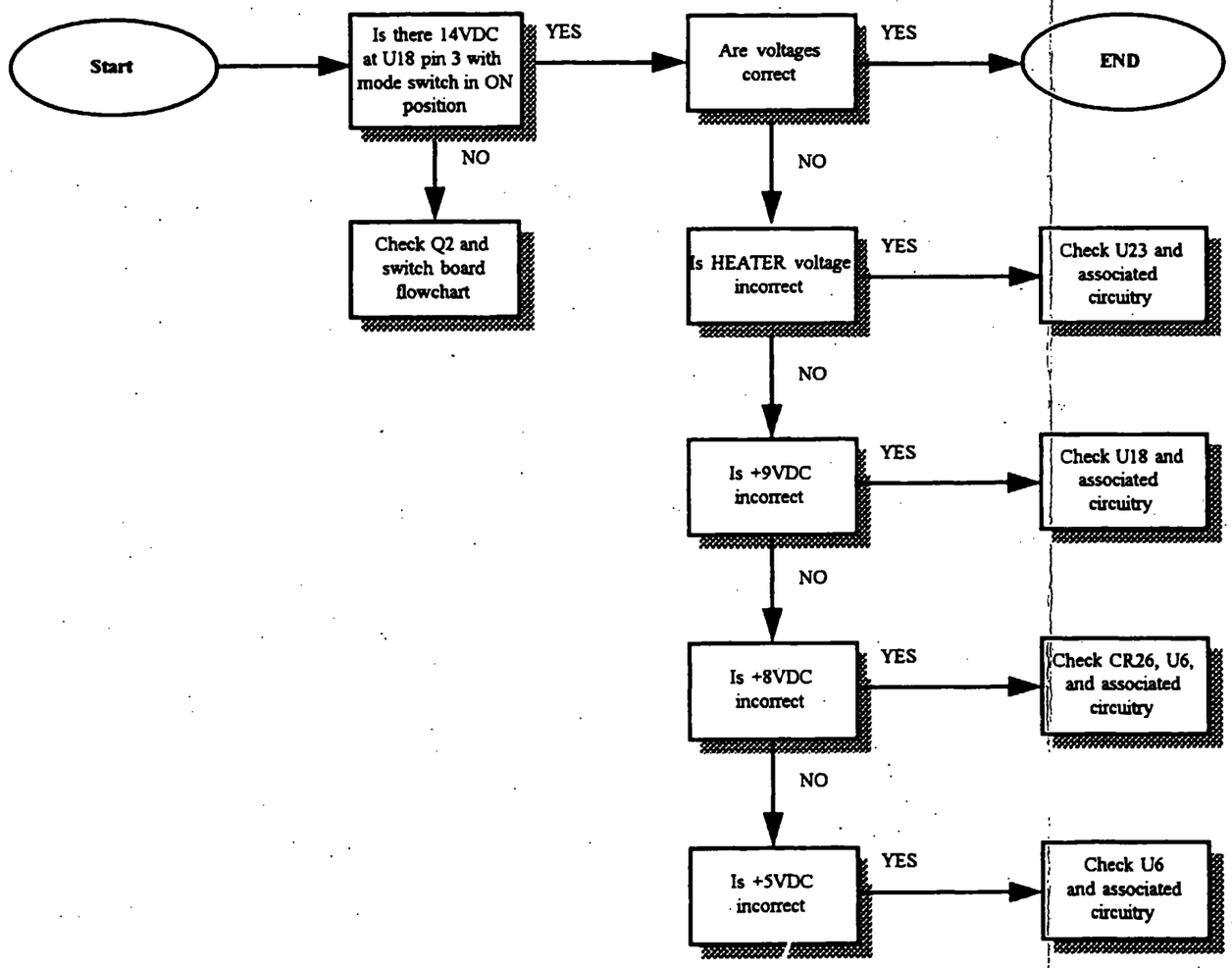


**FIGURE 5-6 KT 76A/78A Power Supply Troubleshooting Flow Chart (S/N ≥ 110,000)**

## KT76A Receiver troubleshooting Flow Chart

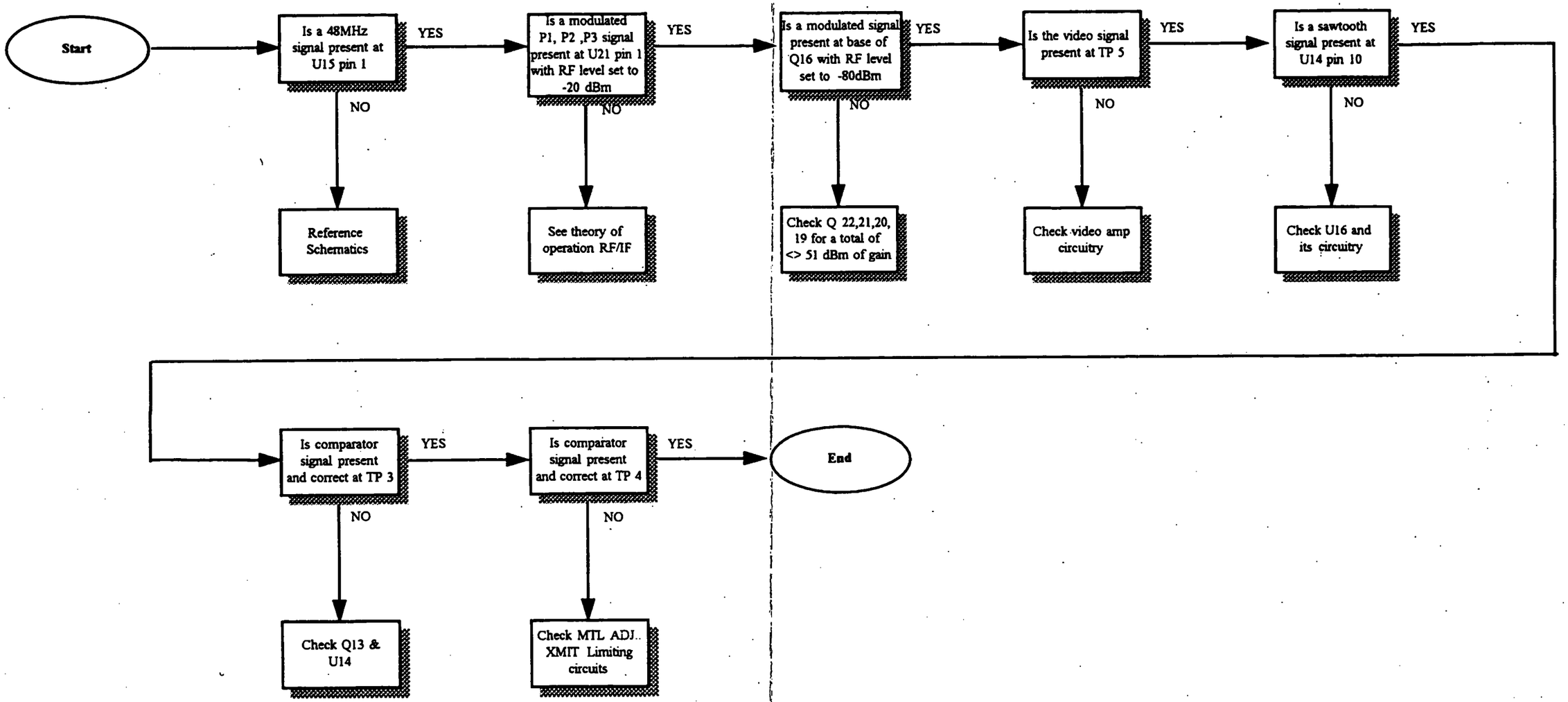


**FIGURE 5-7 KT 76A/78A Receiver Troubleshooting Flow Chart (S/N ≥ 110,000)**

## KT76A Switch Board troubleshooting Flow Chart

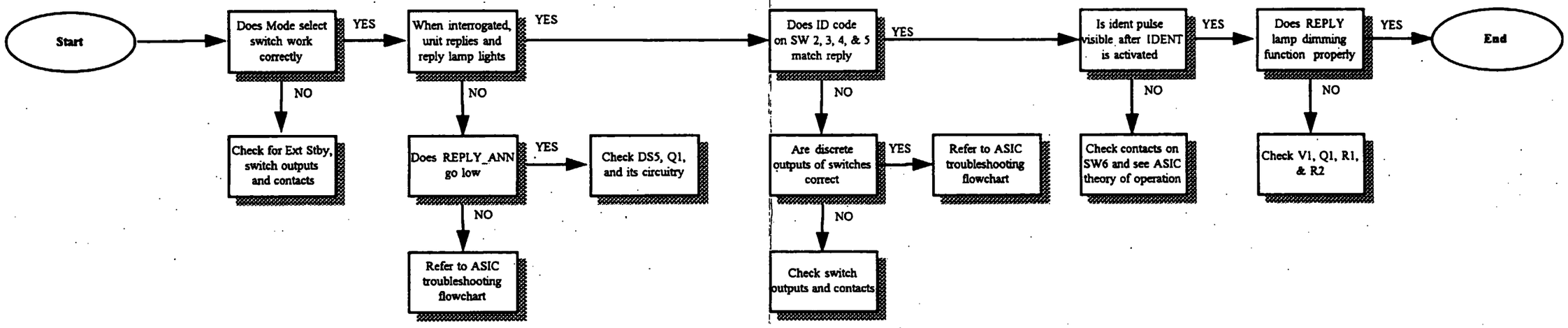


ID Switch Output Codes

| SW POS | A1 | A2 | A3 |
|---|---|---|---|
| 0 | 0 | 0 | 0 |
| 1 | 1 | 0 | 0 |
| 2 | 1 | 1 | 0 |
| 3 | 0 | 1 | 0 |
| 4 | 0 | 1 | 1 |
| 5 | 1 | 1 | 1 |
| 6 | 1 | 0 | 1 |
| 7 | 0 | 0 | 1 |

note: high=1, low=0

**FIGURE 5-8 KT 76A/78A Switch BoardTroubleshooting Flow Chart (S/N ≥ 110,000)**

## KT76A Transmitter troubleshooting Flow Chart

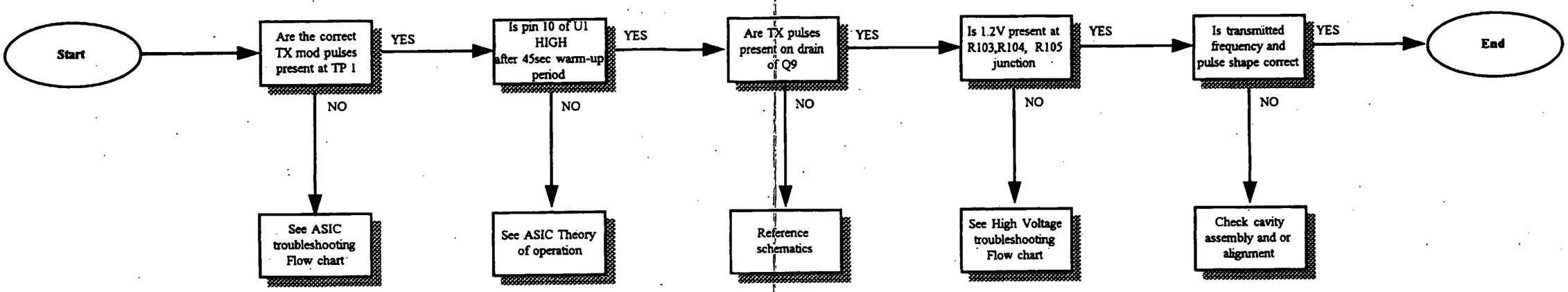


**FIGURE 5-9 KT 76A/78A Transmitter Troubleshooting Flow Chart (S/N ≥ 110,000)**

## WAVEFORMS (SERIAL NUMBERS < 110,000)

RF MTL

CH 1, AC, TP 404

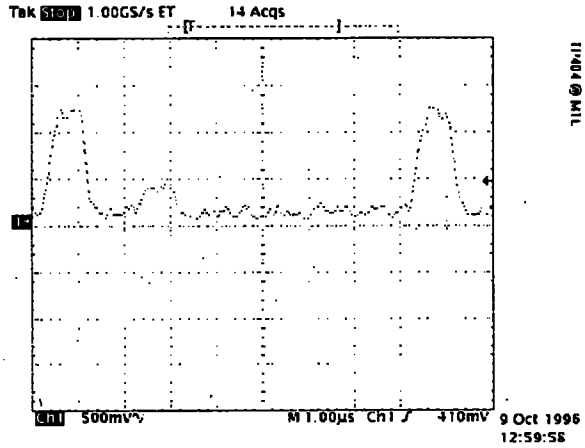


RF MTL +25dB

CH 1, DC, TP404

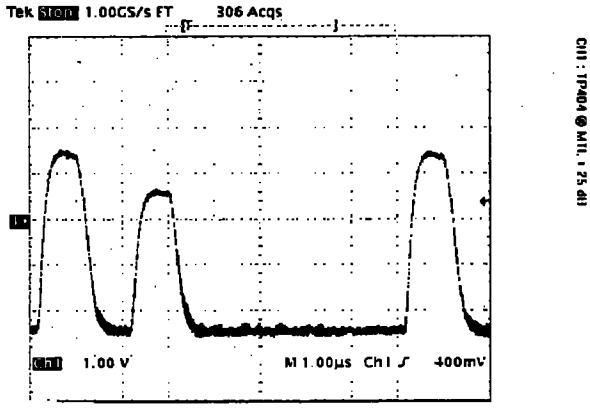

RF MTL +20 dB

CH 1, AC, TP404

CH 2, DC, I404 PIN 3

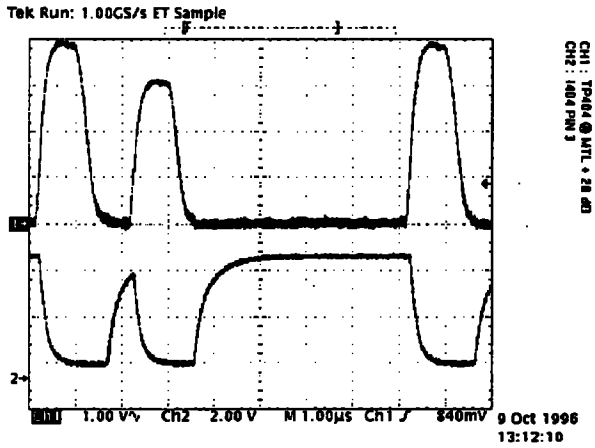


RF MTL +20 dB

CH 1, AC, TP404

CH 2, DC, I403 PIN 1

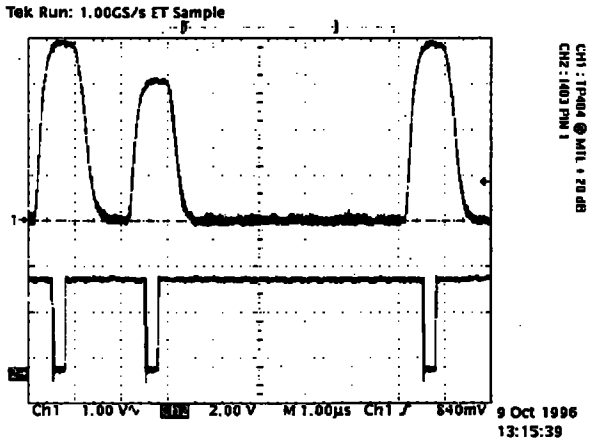


RF MTL +20 dB

CH 1, AC, TP404

CH 2, AC, Q413 EMITTER

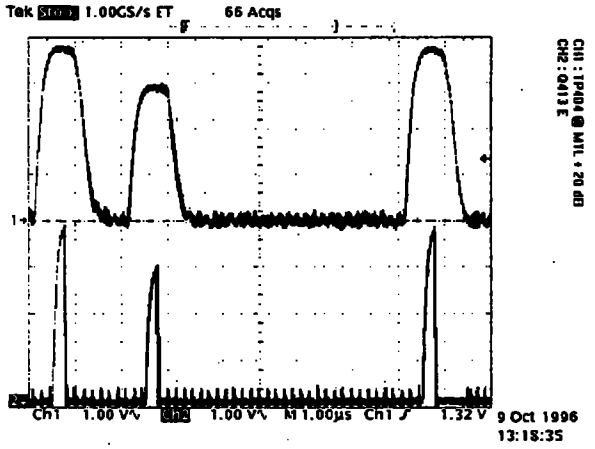

RF MTL +20 dB

CH 1, DC, TP404

CH 2, DC, CR405 ANODE

P2 = P1 -9 dB

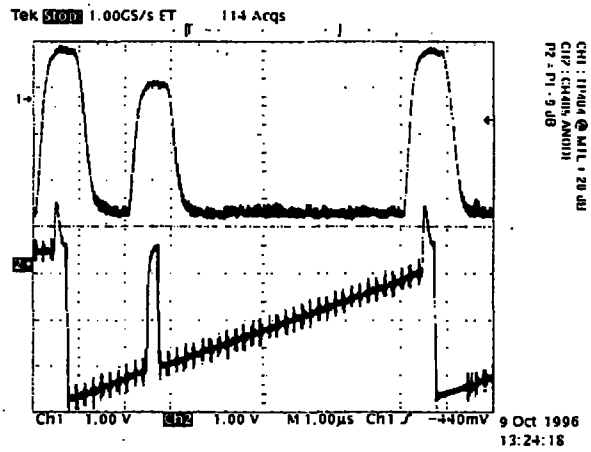


RF MTL +20 dB

CH 1, DC, TP404

CH 2, DC, CR405 ANODE

P2 = P1

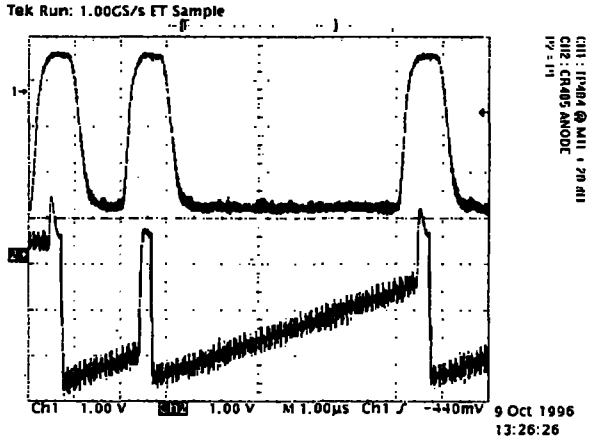


RF MTL +20 dB

CH 1, DC, TP404

CH 2, DC, I401 PIN 7

P2 = P1 -9 dB

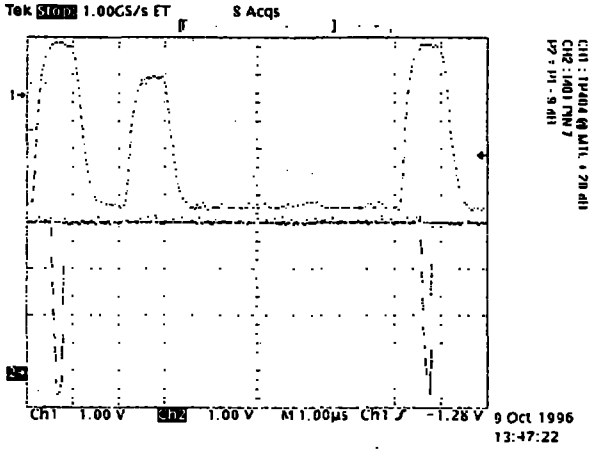

RF MTL +20 dB

CH 1, DC, TP404

CH 2, DC, I401 PIN 7

P2 = P1

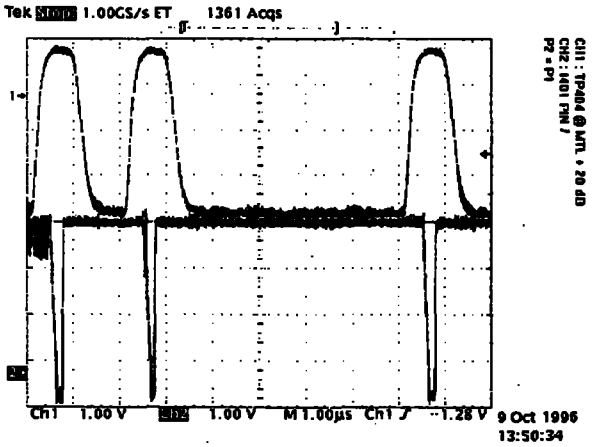


RF MTL +20 dB

CH 1, DC, TP404

CH 2, DC, I404 PIN 12

P2 = P1 – 9 dB

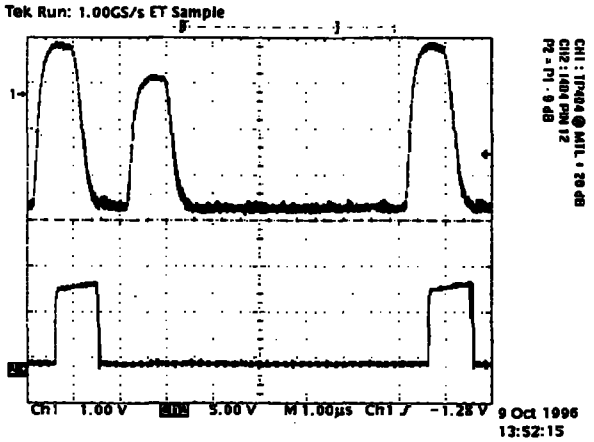


RF MTL +20 dB

CH 1, DC, TP404

CH 2, DC, I404 PIN 12

P2 = P1

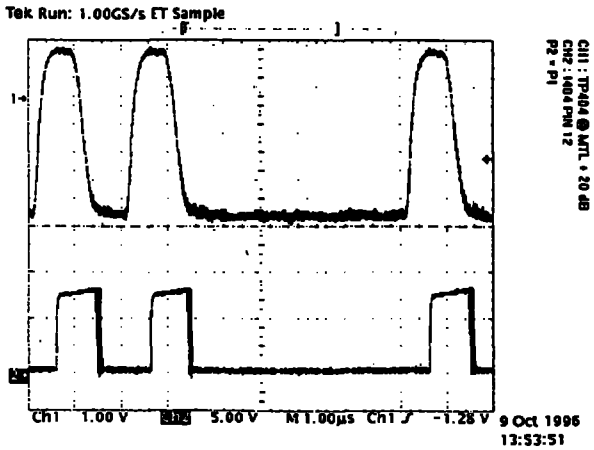

CH 1, DC, TP404

CH 2, DC, TP401

ID CODE 7777

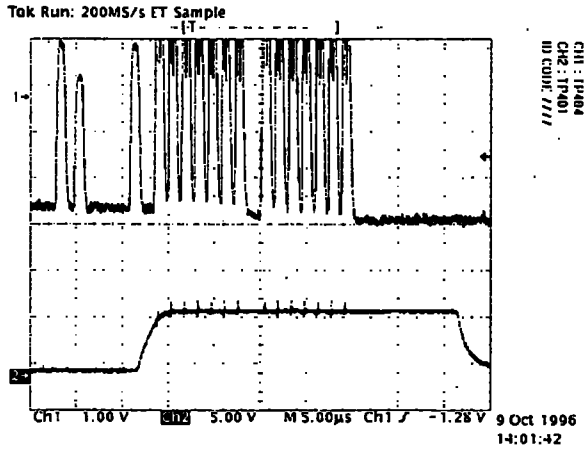


CH 1, DC, TP404

CH 2, DC, I406 PIN 1

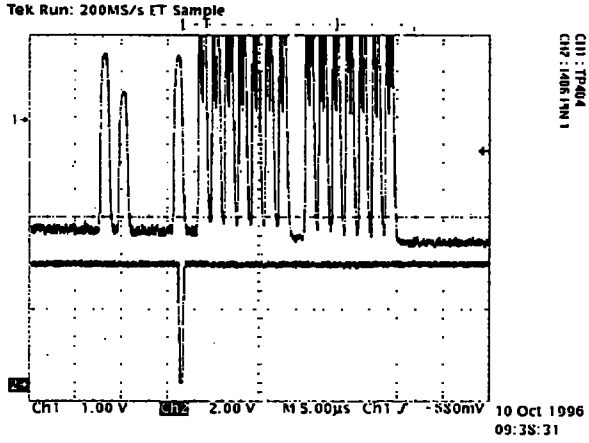


CH 2, DC, I406 PIN 1

CH 2, DC, I406 PIN 12

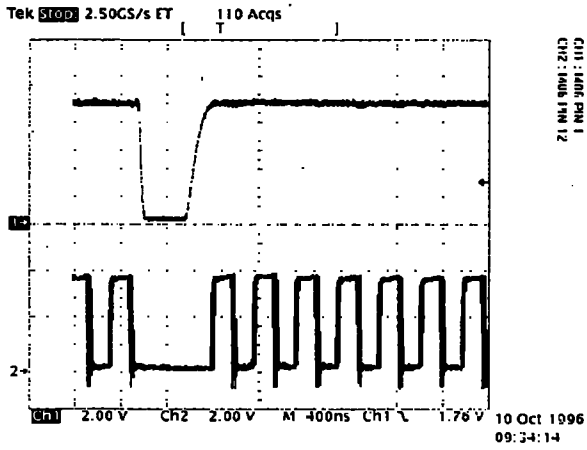

CH 1, DC, I406 PIN 2

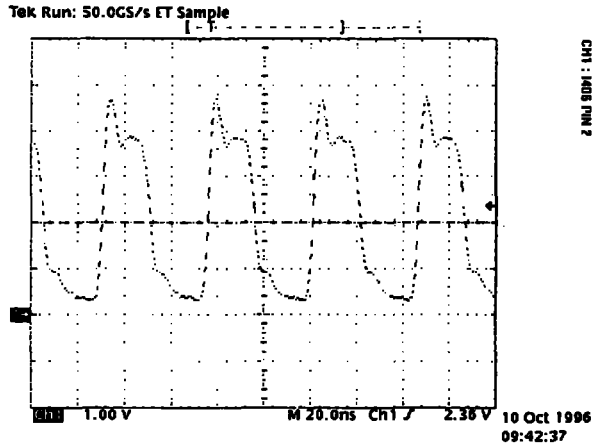


CH 1, DC, I406 PIN 2

CH 2, DC, I406 PIN 12

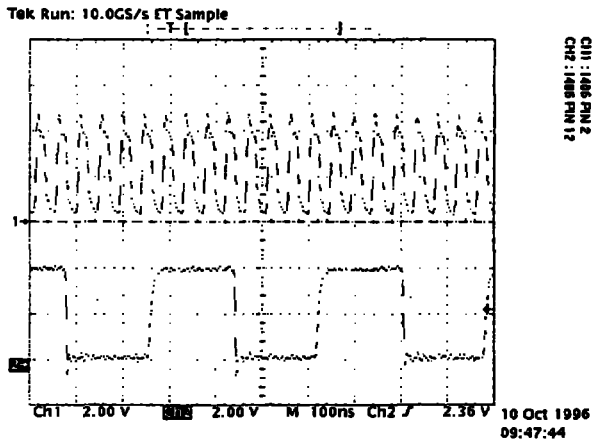


CH 1, DC, I405 PIN 8

CH 2, DC, I405 PIN 7

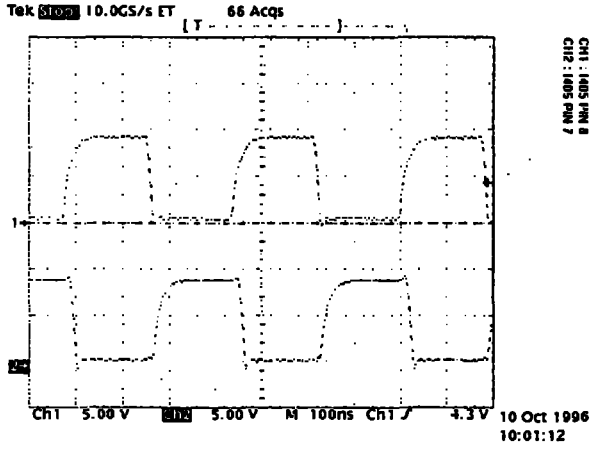

CH 1, DC, I405 PIN 3

CH 2, DC, I402 PIN 6

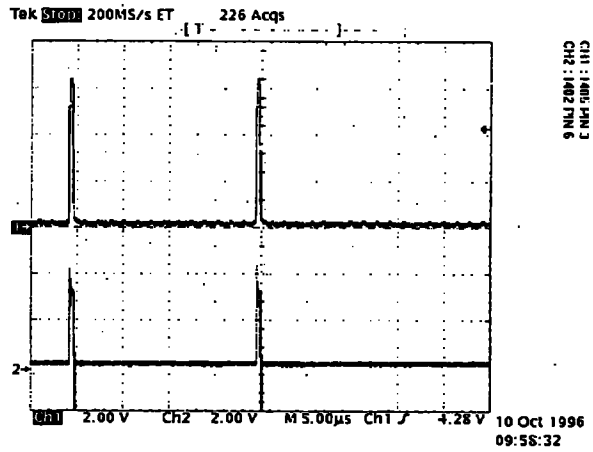


CH 1, DC, I405 PIN 3

CH 2, DC, I402 PIN 6

ID CODE: 7777

SPI ENABLED

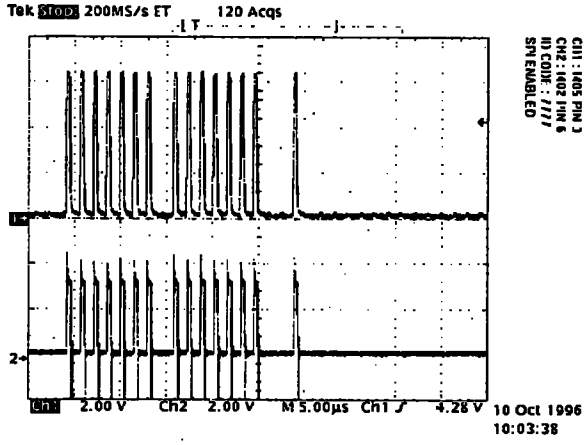


CH 1, DC, I405 PIN 3

CH 2, DC, I402 PIN 6

ID CODE: 7777

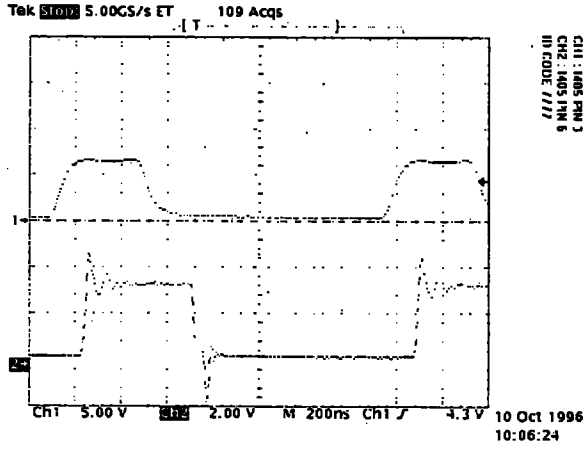

CH 1, DC, Q419 COLLECTOR

ID CODE: 7777

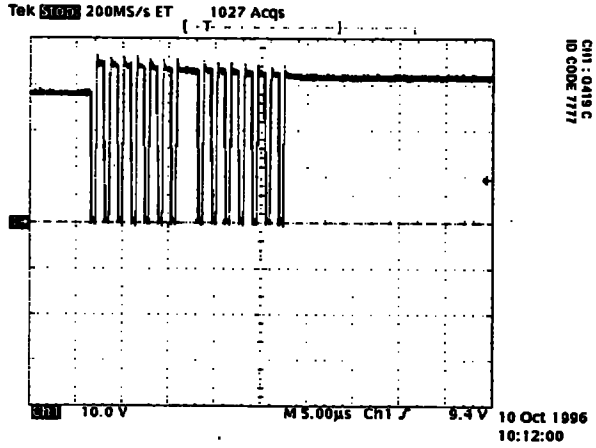


CH 1, DC, Q401 COLLECTOR

CH 2, DC, Q402 COLLECTOR

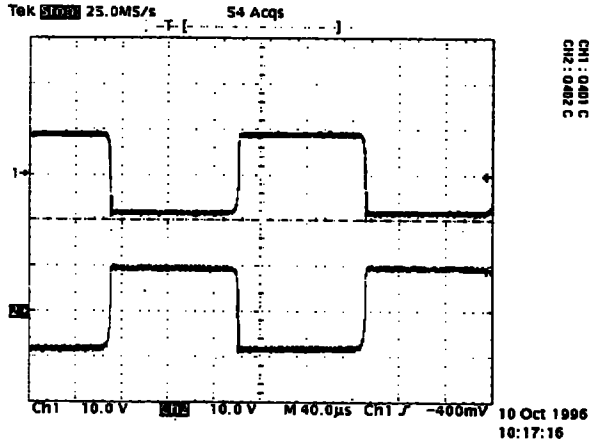

## WAVEFORMS (SERIAL NUMBERS ≥ 110,000)

RF -20dBm

CH 1, DC, TP5

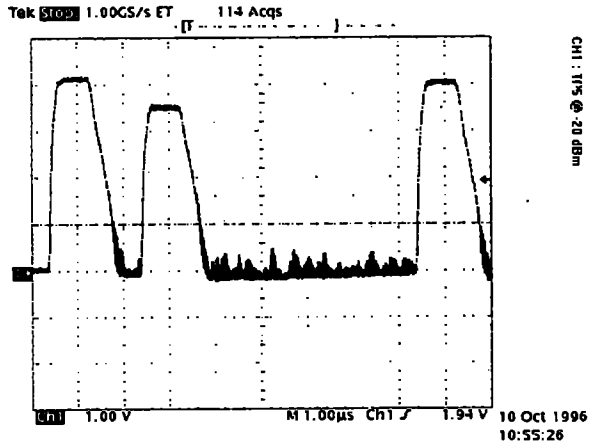


RF MTL

CH 1, DC, TP 5

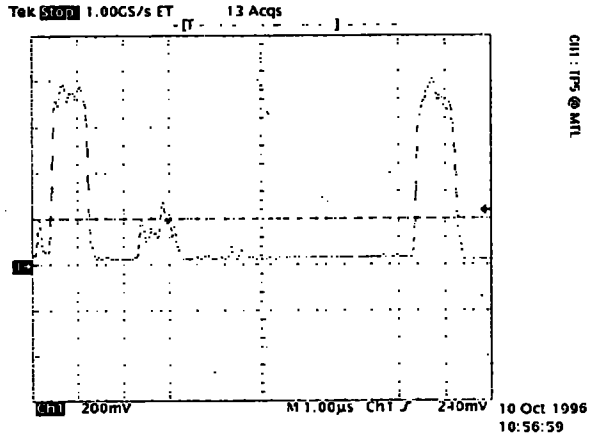


CH 1, DC, U9 PIN 1

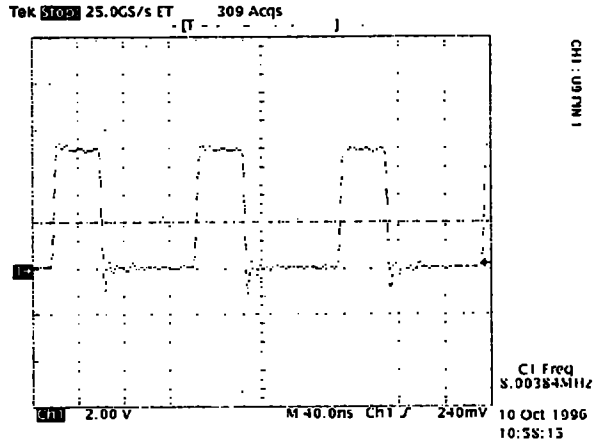

CH 1, AC, U9 PIN 10

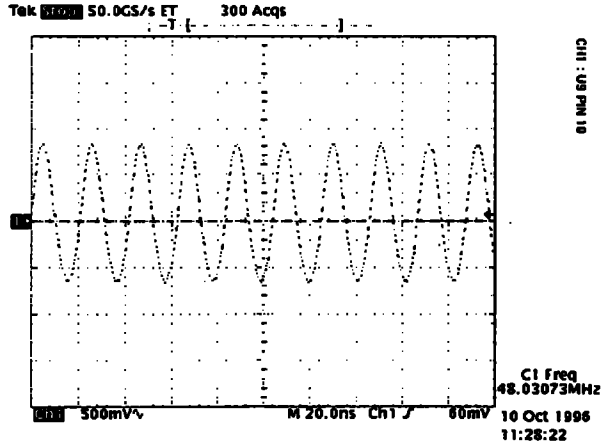


RF -20dBm

CH 1, DC, TP 5

CH 2, AC, U21 PIN 1

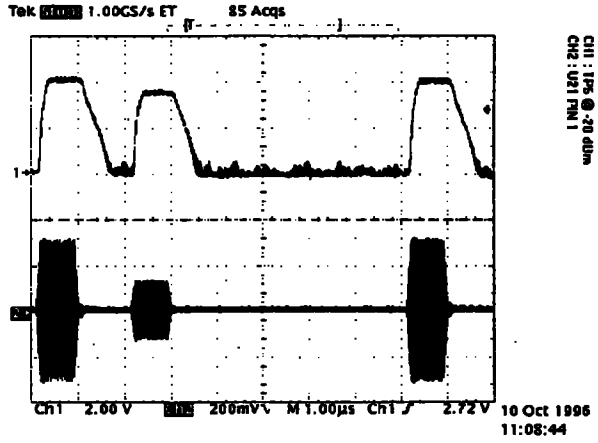


RF MTL

CH 1, DC, TP 5

CH 2, AC, Q18 BASE

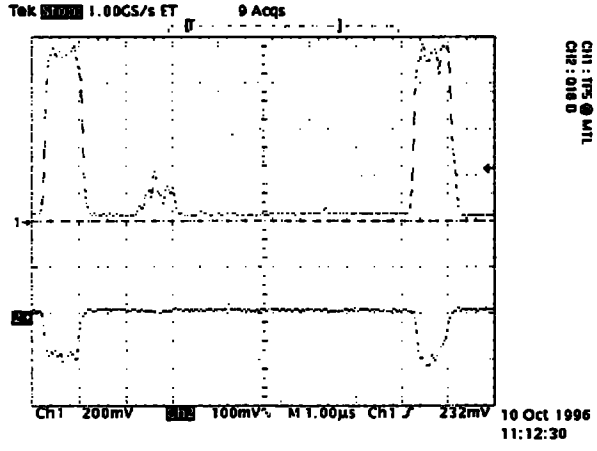

RF MTL

CH 1, DC, TP 5

CH 2, AC, U16 PIN 6

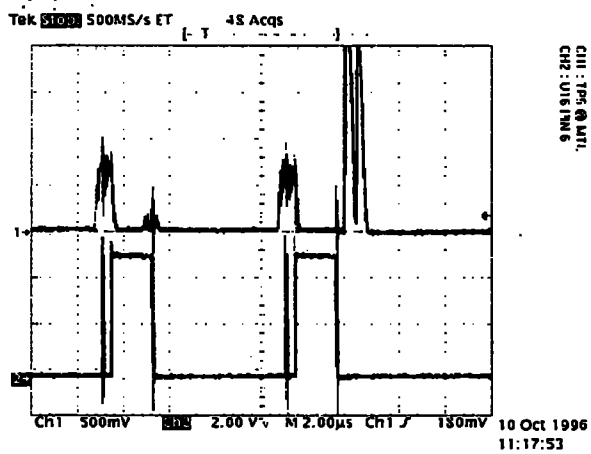


RF MTL

CH 1, DC, TP 5

CH 2, AC, U16 PIN 9

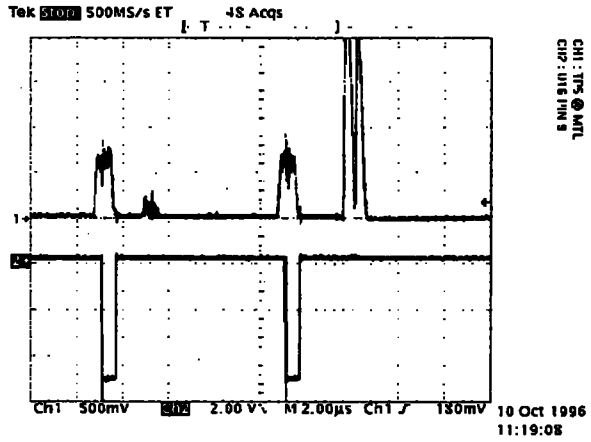


RF MTL

CH 1, DC, TP 5

CH 2, DC, U14 PIN 10

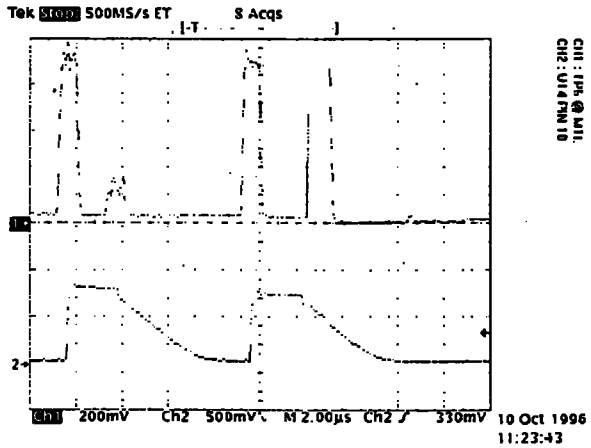

RF MTL + 3dB

CH 1, DC, TP 5

CH 2, AC, U14 PIN 10

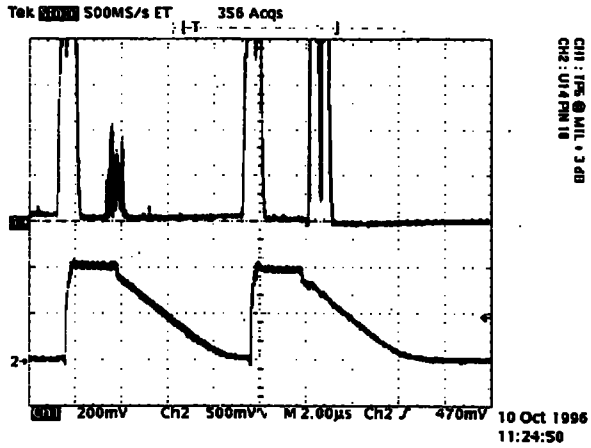


RF –30 dBm

CH 1, DC, Q8 BASE

CH 2, DC, Q7 COLLECTOR

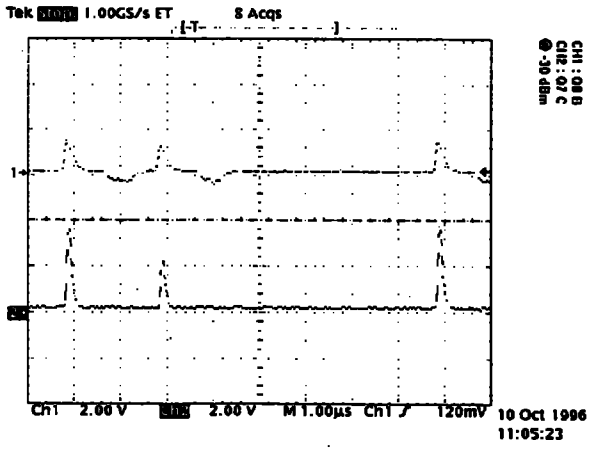


500 prf

CH 1, AC, U1 PIN 4

CH 2, AC, U12 PIN 10

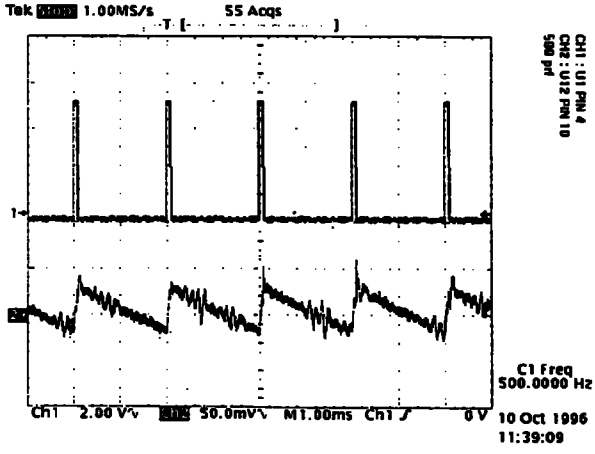

RF MTL

CH 1, DC, TP5

CH 2, DC, TP4

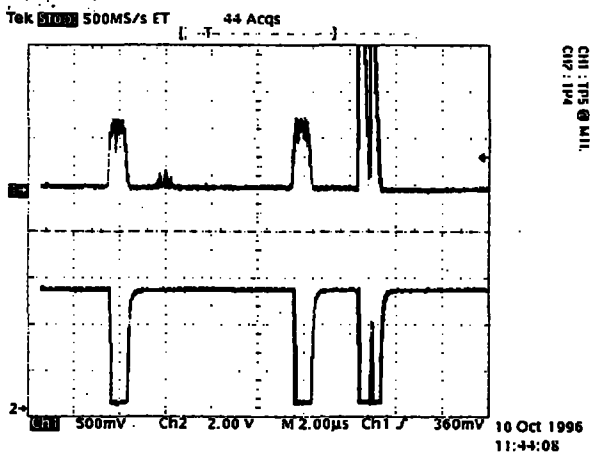


RF MTL

CH 1, DC, TP5

CH 2, DC, TP3

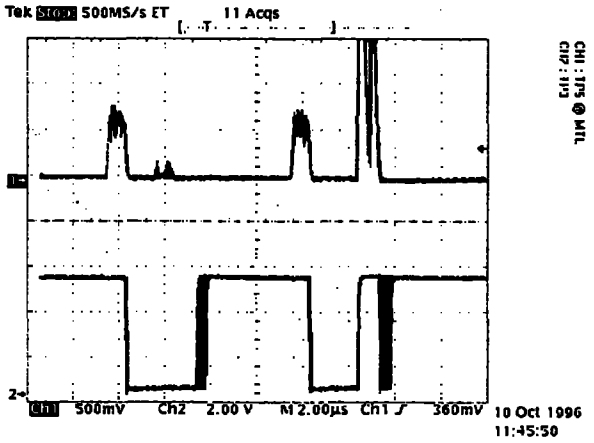


CH 1, DC, TP5

CH 2, DC, TP1

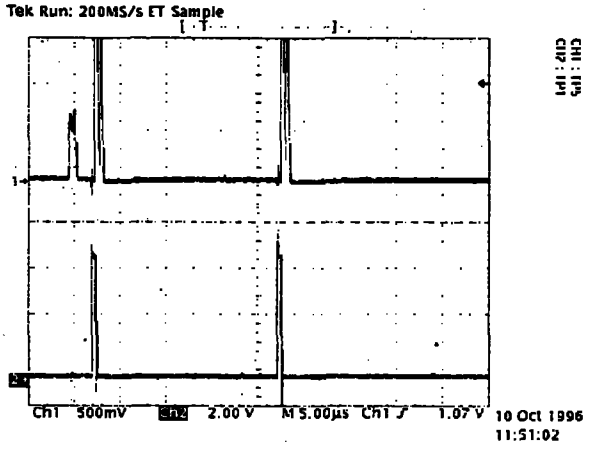

CH 1, DC, TP5

CH 2, DC, TP1

ID CODE 7777

SPI ENABLED

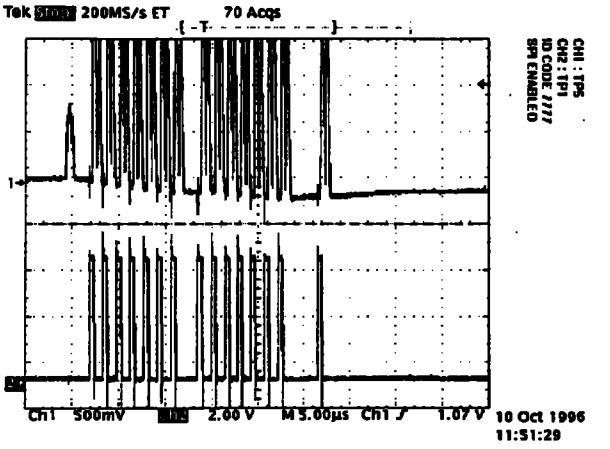


CH 1, DC, TP5

CH 2, DC, U9 PIN 80

ID CODE 7777

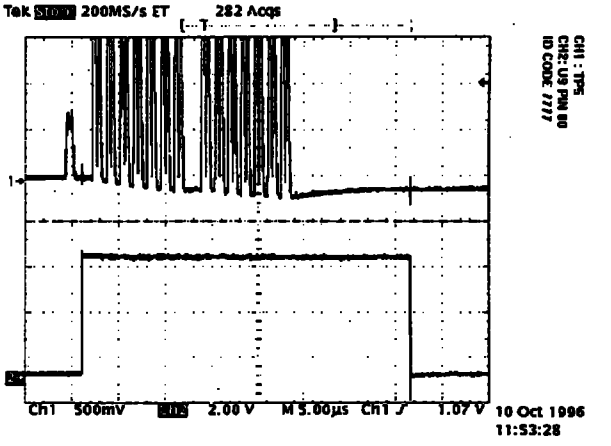

# SECTION VI

# ILLUSTRATED PARTS LIST

## 6.1 INTRODUCTION

The Illustrated Parts List (IPL) is a complete list of assemblies and parts required for the unit. The IPL also provides for the proper identification of replacement parts. Individual Bills of Material (BOM) within this IPL are arranged in numerical sequence starting with the top assembly and continuing with the sub-assemblies. All mechanical parts will be separated from the electrical parts used on the sub-assembly. Each BOM is followed by the Assembly Drawing and Schematic Diagram for that assembly.

Parts identified in this IPL by AlliedSignal Part Number meet design specifications for this equipment and are the recommended replacement parts. Warranty information concerning AlliedSignal replacement parts is contained in Service Memo #1,P/N 600-08001-00XX.

This section describes the various items that appear on the Bills of Material. A sample BOM is included in this section as **Figure 6-1**.

A. BOM Number

The Bill of Material Number appears at the top of the BOM as a 9 or 12-digit number which is also the AlliedSignal Part Number for the assembly. The BOM Number is followed by the assembly description and the revision level of the BOM.

B. Symbol Column

This column contains the Reference Designators of the electrical components of the assembly. Mechanical parts are not assigned Reference Designators. The Reference Designator consists of a letter abbreviation which indicates the type of component followed by the number assigned to that part (C101, Q101, etc). Common Reference Designator abbreviations are listed below.

| | | | |
|---|---|---|---|
| B | Motor or Synchro | Q | Transistor |
| C | Capacitor | P | Plug |
| CJ | Circuit Jumper | R | Resistor |
| CR | Diode | RT | Thermistor |
| DS | Lamp | S | Switch |
| F | Fuse | T | Transformer |
| FL | Filter | TP | Test Point |
| I | Integrated Circuit | U | Resistor/Capacitor Network/Integrated Circuit |
| J | Jack | V | Photocell/Vacuum Tube |
| L | Inductor | WG | Waveguide |
| M | Meter | Y | Crystal |

C. Part Number Column

This column contains the AlliedSignal Part Number for each part. Special purpose 999-09999-00XX series part numbers may appear in the BOM and are described below.

(1) CR401 999-09999-0096 RESERVED

The Reference Designator CR401 has been reserved for future use; the assembly does not currently include a CR401.

(2) CR401 999-09999-0097 SEE NEXT ASSEMBLY

CR401 is a part of the electrical circuit but due to assembly or testing requirements is actually part of a different assembly.

(3) CR401 999-09999-0098 NOT USED

The Reference Designator CR401 is available for future assignment. The assembly does not currently include a CR401.

(4) CR401 999-09999-0099 DO NOT USE

The Reference Designator CR401 has been previously used for this assembly and later deleted. It may not be reassigned on this assembly.

(5) I401 999-09999-0090 REF SFTWARE SET SEE APPENDIX S

I401 is a programmed memory device. Refer to Section 8, Software Documentation in this introduction for a description of the software documentation system being used at the time of publication of this manual.

D. Description Column

This column contains the description of each part in the assembly. Common abbreviations which may appear in this column are listed below.

| | | | |
|---|---|---|---|
| AL | Aluminum | MY | Mylar |
| ASSY | Assembly | PC | Polycarbonate |
| BIFLR | Bifilar | PF | Precision Film |
| BOM | Bill of Material | PP | Paper |
| CAP | Capacitor | PS | Polystrene |
| CC | Carbon Composite | QW | Quarter Watt |
| CF | Carbon Film | RES | Resistor |
| CH | Choke | S | Silicon |
| CR | Ceramic | SCR | Screw |
| CRT | Cathode Ray Tube | SM | Silver Mica |
| DC | Disc Ceramic | STDF | Standoff |
| DIO | Diode | SW | Switch |
| EL | Electrolytic | TERM | Terminal |
| EW | Eighth Watt | TN | Tantalum |
| FC | Fixed Composition | TST PT | Test Point |
| FERR | Ferrite | TW | Tenth Watt |
| FLTR | Filter | U | Integrated Circuit |
| FT | Feedthru | VA | Variable |
| HV | High Voltage | WW | Wire Wound |
| HVXFMR | High Voltage XFMR | XFMR | Transformer |
| HW | Half Watt | XSTR | Transistor Ceramic |
| MC | Monolithic | XTAL | Crystal |

E. Assembly (A) Column

An "A" in this column indicates that the part indicated is an assembly. If the P/N and description reads "200-0XXXX-0099 COMMON BOM" or "200-XXXX-99 COMMON BOM" the parts for that assembly are included in the same BOM. The parts breakdown for an assembly with any other P/N will be found in the BOM with the same number.

F. Unit of Measure (UM) Column

This column indicates the Unit of Measure for each part. Common abbreviations found in this column are listed below.

| | | | |
|---|---|---|---|
| EA | Each | RF | For Reference Only |
| FT | Foot | IN | Inch |
| AR | As Required | | |

G. Quantity and Flavor Columns

Individual flavors of an assembly are identified by the last four digits of the P/N. Part quantities for each flavor will be indicated under headings numbered 0000 through 9900 as required. The parts indicated in the 9900 Column are common to all other flavors of the assembly and are considered the Common Bill of Material for the assembly.

H. Software Documentation

The documentation of software involves the use of several unique types of part numbers. The following subsections list these part numbers with their description. In some cases, some specific versions of hardware must be used with specific versions of software. Refer to Appendix S to determine the correct P/N for ordering the correct programmed device. You will need to know the part number of and the software revision level of the unit. Appendix S contains block diagrams for documented software/hardware configurations. The unit designator and part numbers are listed in the top box. One level down from that is a box for the 206-type system software BOM number and boxes for the BOM numbers for all other hardware assemblies that do not contain any software. The next level are boxes containing 205-type BOM's for assemblies which use software under the system software box. Below these top BOM boxes are two boxes. One box shows the hardware BOM number and the other contains a list of circuit designators and part numbers of individual integrated circuits used on the circuit board. The hardware/software configuration diagrams in Appendix S provide a method to coordinate hardware with software versions and revision levels.

The last two digits of all software related P/N's, designated in the following text as -RN, indicate the revision number or level of the related software. This number is incremented with each revision of software. For example, -01 is revision 0, -02 is revision 1, and so on. When ordering specific integrated circuits or devices, the applicable 122-XXXXX-XXRN P/N is used. When ordering a circuit board which contains software, the applicable 205X-XXXX-XXRN P/N is used. Applicable assembly drawings and schematic diagrams will then follow in order.

(1) General Information

The part number of the unit, typically the 065-, 066- or 071-top assembly part number, contains a 206- item in its bill of materials. This 206- item is the configuration control mechanism for programmable electronic devices of the unit. Two different means exist to label the hardware/software configuration of the unit depending on the the part number of the unit:

(a) When the part number of the unit is a 9-digit part as represented on the TSO label, the last 2 digits of the 206-item are the digits of the SOFTware IDentification tag that appears on the unit.

(b) When the part number of the unit is a 12-digit part as represented on the TSO label, the last 4 digits of the 206- item are the digits of the SOFTware MODification tag that appears on the unit. In the example shown on page 7, the 206- item is flagged with an "A" in the right hand margin.

(2) Definition of a Hardware/Software System

The 206- item represents the collection of all boards in the unit which contain electronic programmable devices (software). The hardware/software system (206-) bill of materials contains two categories of items:

(a) The part number of the unit label,i.e. the SOFT ID or SOFT MOD tag.

1) In the case of the 9-digit TSOed unit the unit label part number 057-03284-00XX where XX is the last two digits of the 206- number.

2) In the case of the 12-digit TSOed unit the unit label part number is 057-05287-YYYY where YYYY is the last four digits of the 206- number. This number is also referred to as the software revision level of the unit. The software identification tag is illustrated below.

| SW ID |
|---|
| 01 |

(b) The 205- hardware/software board assemblies which constitute all the hardware/software boards which this unit contains. In the example, the item marked "B" is the 205- hardware/software board used in the rest of the example.

(3) Definition of a Hardware/Software Board

The hardware/software board (205-) bill of materials contains four categories of items:

(a) The part numbers of the board label.

1) For 12-digit 205-0XXXX-00YY board labels the first 10 digits is contained on a label part number of 057-05252-XXXX and the last two digits is specified by 057-05335-00YY.

2) For 9-digit 205-WWWW-ZZ board labels the first 7 digits is contained on a label part number of 057-050WW-00WW and the last two digits is specified by 057-05252-00ZZ.

The 205-0XXXX-00YY and the 057-05252-00YY P/N is incremented whenever the revision number of any one or more of the 125-0XXXX-XXRN P/N's is incremented. This means that the -RN part of the P/N's for the 057-05252-XXRN and the 205-0XXXX-XXRN will be the same. A circuit board identification tag is illustrated below.

| | |
|---|---|
| 205-06616- | 0000 |

(b) The software programmable device set assemblies (125-). Each 125-programmable device set constitutes all the software for a unique microprocessor on the hardware board. The group of 125- programmable device sets constitutes all of the software for all of the microprocessors.

1) 125-0XXXX-XXRN AlliedSignal Part Numbers

The 125-0XXXX-XXRN P/N is a BOM which lists all the 122-0XXXX-XXRN programmed devices in a software set for a given circuit board. There may be only one 122-0XXXX-XXRN P/N listed or there may be several. Whenever the revision number (RN) of any one or more of the 122-0XXX-XXRN programmed devices is incremented in a new software release, the -XXRN part of the 125-0XXXX-RN P/N is also incremented. This 125-0XXXX-XXRN BOM also indentifies the "U" or "I" circuit designators used to identify the programmed devices on assembly drawings and schematic diagrams.

2) The 122-0XXXX-XXRN P/N is used to identify an individual integrated circuit or other device containing software.

(c) The non-software programmable device set assemblies (126-) which fulfill software requirements.

(d) The specification of the hardware board (200-).

In the example, the items marked "C" in the right margin are all the programmable device assemblies which fulfill the software requirements.

(4) Definition of a Hardware Board

The hardware board (200-) bill of materials contains two categories of items that relate to programmable devices:

(a) The non-software programmable device sets (126s) that fulfill hardware requirements. (Items D1 thru D4 in the example).

(b) The references to all of the programmable devices (122-) on to board. These references resolve device location on the board in that they use the SYMBOL field of the bill of materials to specify component location. These 122-numbers are of the form 122-3XXXX-9999 or 122-0YYYY-9999.

The 122- numbers of the form 122-3XXXX-9999 are used for non-software programmable devices (126-) that fulfill hardware requirements and therefore these programmable device sets appear on the hardware board (200-) bill of materials. (Items D5 thru D10 in the example).

The 122- numbers of the form 122-0YYYY-9999 are used for both software programmable devices (125-) (items D12 thru D15 in the example) andnon-software programmable devices (126-)(item D11 inthe example) that fulfill software requirements.

These programmable device sets appear on the hardware/software board (205-) bill of materials.

The exact programmable device (the resolution of the -9999 in the above items) is specified by the respective software programmable device set (125-) or the non-software programmable device set (126-) bill of materials.

Using the SYMBOL field as specified above would discourage the use of the SYMBOL field for this purpose in the programmable device sets (125- and 126-) bill of materials. This would then permit the specification of the same programmable device sets in different boards, hence different component designators.

In the example, **Figure 6-1**:

- the items flagged D1 thru D4 in the right margin are non-software programmable device sets,

- the items flagged D5 thru D10 in the right margin are non-software programmable device designators that fulfill hardware requirements,

- the item flagged D11 in the right margin is a non-software programmable device designator that fulfills software requirements,

- the items flagged D12 thru D15 in the right margin are software programmable device designators that fulfill software requirements,

**Figure 6-1**, while closely related to a specific product, does not represent an exact configuration in use by that product. This example has been modified to clarify certain points.

Assy: 066-04020-0203 SG464 HSI W/O WX

| Symbol | Part Number | Rev | Description | UM | Quantity | BxItm |
|---|---|---|---|---|---|---|
| | 016-01008-0004 | 3 | GLYPTAL 7526 BL | AR | 1.00 | |
| | 016-01131-0000 | 1 | CNTCT CMT BND 1055 | AR | 1.00 | |
| | 047-02579-0002 | 2 | HANDLE ASSEMBLY | EA | 1.00 | |
| | . | | | | | |
| | 047-09392-0001 | 0 | SPACER RT W/FIN | EA | 1.00 | |
| | 057-02203-0002 | 3 | FLAVOR STCKR | EA | 1.00 | |
| | 057-02203-0003 | 3 | FLAVOR STCKR | EA | 1.00 | |
| | 057-05286-0000 | 0 | SERIAL TAG SG 464 | EA | 1.00 | |
| | 075-05082-0002 | 0 | GUIDE PLATE TOP | EA | 1.00 | |
| | . | | | | | |
| | 090-00277-0000 | 1 | HOLD DOWN BRACKET | EA | 1.00 | |
| | 155-02536-0001 | 1 | CABLE ASSY | EA | 1.00 | |
| | 200-07703-0000 | 2 | DPX CONN BD ASSY | EA | 1.00 | |
| | 200-07704-0000 | 8 | LV PS BD ASSY | EA | 1.00 | |
| | 206-00118-0301 | 0 | EFS40/50 HSI SET | EA | 1.00 | <--- A |

Assy: 206-00118-0301 EFS40/50 HSI SET

| Symbol | Part Number | Rev | Description | UM | Quantity | BxItm |
|---|---|---|---|---|---|---|
| | 057-05287-0301 | 0 | SW MOD TAG | EA | 1.00 | |
| | 205-00564-0002 | 0 | EFIS 40/50 I/O PBS | EA | 1.00 | |
| | 205-00565-0004 | 0 | E40/50 HSI P/D PBS | EA | 1.00 | <--- B |

Assy: 205-00565-0004 E40/50 HSI P/D PBS

| Symbol | Part Number | Rev | Description | UM | Quantity | BxItm |
|---|---|---|---|---|---|---|
| | 057-02241-0016 | 1 | IDENT LABEL | EA | 1.00 | |
| | 057-05252-0565 | 1 | IDT 205-00565-0000 | EA | 1.00 | |
| | 125-00602-0004 | 0 | EFIS 40/50 NAV SDS | EA | 1.00 | <--- C1 |
| | 125-00603-0002 | 0 | EFIS40/50 DSPL SDS | EA | 1.00 | <--- C2 |
| | 126-00019-0000 | 1 | EFS40/50 CLIPPER | EA | 1.00 | <--- C3 |
| | 200-07706-0000 | 1 | PRCSR/DSPL BD ASSY | EA | 1.00 | |

**FIGURE 6-1 TYPICAL BILL OF MATERIAL**
**(Sheet 1 of 4)**

Assy: 200-07706-0000 PRCSR/DSPL BD ASSY

| Symbol | Part Number | Rev | Description | UM | Quantity | BxItm |
|---|---|---|---|---|---|---|
| | 009-07706-0000 | 0 | PC BD PRCSR/DSPL | EA | 1.00 | |
| | . | | | | | |
| | . | | | | | |
| | . | | | | | |
| | 150-00004-0010 | 3 | TUBING TFLN 22AWG | IN | 2.00 | |
| | 200-04969-0000 | 0 | EXT BD PRCSR/ADI A | RF | 0.00 | |
| | 126-00005-0000 | 1 | EFS40/50 INT LOGIC | EA | 1.00 | <--- D1 |
| | 126-00006-0000 | 1 | EFS40/50 VIDEO MUX | EA | 1.00 | <--- D2 |
| | 126-00017-0000 | 1 | EFS40/50 SM SET | EA | 1.00 | <--- D3 |
| | 126-00018-0000 | 1 | EFS40/50 SINE SET | EA | 1.00 | <--- D4 |
| C 5001 | 111-02104-0042 | 26 | CAP MC100KPF50V20% | EA | 1.00 | |
| | . | | | | | |
| | . | | | | | |
| | . | | | | | |
| I 5005 | 122-30001-9999 | 0 | EFS40/50 VIDEO MUX | RF | 0.00 | <--- D5 |
| I 5008 | 122-30002-9999 | 0 | EFS40/50 INT LOGIC | RF | 0.00 | <--- D6 |
| | . | | | | | |
| | . | | | | | |
| | . | | | | | |
| I 5036 | 122-30003-9999 | 0 | EFS40/50 SM HIGH | RF | 0.00 | <--- D7 |
| I 5037 | 122-30004-9999 | 0 | EFS40/50 SM LOW | RF | 0.00 | <--- D8 |
| I 5038 | 122-30005-9999 | 0 | EFS40/50 SINE HIGH | RF | 0.00 | <--- D9 |
| I 5039 | 122-30006-9999 | 0 | EFS40/50 SINE LOW | RF | 0.00 | <--- D10 |
| | . | | | | | |
| | . | | | | | |
| | . | | | | | |
| I 5075 | 122-00958-9999 | 0 | EFS40/50 CLIPPER | RF | 0.00 | <--- D11 |
| | . | | | | | |
| | . | | | | | |
| | . | | | | | |
| I 5138 | 122-00918-9999 | 0 | EFS40/50 HSI NAV-E | RF | 0.00 | <--- D12 |
| I 5139 | 122-00919-9999 | 0 | EFS40/50 HSI NAV-O | RF | 0.00 | <--- D13 |
| | . | | | | | |
| | . | | | | | |
| | . | | | | | |
| I 5158 | 122-00920-9999 | 0 | EFS40/50 HSI DSP-E | RF | 0.00 | <--- D14 |
| I 5159 | 122-00921-9999 | 0 | EFS40/50 HSI DSP-O | RF | 0.00 | <--- D15 |
| | . | | | | | |
| | . | | | | | |
| | . | | | | | |

Assy: 126-00005-0000 EFS40/50 INT LOGIC

| Symbol | Part Number | Rev | Description | UM | Quantity | BxItm |
|---|---|---|---|---|---|---|
| | 122-30002-0000 | 0 | EFS40/50 INT LOGIC | EA | 1.00 | |

Assy: 122-30002-0000 EFS40/50 INT LOGIC

| Symbol | Part Number | Rev | Description | UM | Quantity | BxItm |
|---|---|---|---|---|---|---|
| | 120-02376-0000 | 1 | EPLD EP320 (OTP) | EA | 1.00 | |

**FIGURE 6-1 TYPICAL BILL OF MATERIAL**
**(Sheet 2 of 4)**

Assy: 125-00602-0004 EFIS 40/50 NAV SDS

| Symbol | Part Number | Rev | Description | UM | Quantity | BxItm |
|---|---|---|---|---|---|---|
| | 122-00918-0004 | 0 | EFS40/50 HSI NAV-E | EA | 1.00 | |
| | 122-00919-0004 | 0 | EFS40/50 HSI NAV-O | EA | 1.00 | |

Assy: 125-00603-0002 EFIS40/50 DSPL SDS

| Symbol | Part Number | Rev | Description | UM | Quantity | BxItm |
|---|---|---|---|---|---|---|
| | 122-00920-0002 | 0 | EFS40/50 HSI DSP-E | EA | 1.00 | |
| | 122-00921-0002 | 0 | EFS40/50 HSI DSP-O | EA | 1.00 | |

**FIGURE 6-1 TYPICAL BILL OF MATERIAL**
**(Sheet 3 of 4)**

BOM NUMBER

ASSEMBLY VERSION

PROGRAMMABLE DEVICE SET

UNIT OF MEASURE

QUANTITY

REFERENCE DESIGNATOR

PART NUMBER

DESCRIPTION

200-08366-0000 MST67 IOP/DLP R: 2 MST0067A
200-08366-0000 MST67 IOP/DLP R: 2 MST0067A

| SYMBOL | PART NUMBER | DESCRIPTION | A | UM | 0000 | 9900 |
|---|---|---|---|---|---|---|
| | 009-08366-0000 | PC BD IOP/DLP | A | EA | 1.00 | 1.00 |
| | 016-01040-0000 | COATING TYPE AR | | AR | 1.00 | 1.00 |
| | 033-00114-0021 | SOCKET IC DIP 28C | A | EA | 3.00 | 3.00 |
| | 047-09680-0001 | KEYING BRACKET | A | EA | 3.00 | 3.00 |
| | 090-00087-0000 | CLIP CRYSTAL | | EA | 1.00 | 1.00 |
| | 092-05003-0015 | EYELET .049 | | EA | 2.00 | 2.00 |
| | 126-00030-0000 | MST67A ASIC SFTWR | A | EA | 1.00 | 1.00 |
| C 9001 | 106-04104-0047 | CH 100KX7R/50V | | EA | 1.00 | 1.00 |
| C 9002 | 106-04104-0047 | CH 100KX7R/50V | | EA | 1.00 | 1.00 |
| C 9003 | 106-04104-0047 | CH 100KX7R/50V | | EA | 1.00 | 1.00 |
| CR 9001 | 007-06180-0000 | DIO SW MMBD6050 | | EA | 1.00 | 1.00 |
| CR 9002 | 007-08092-0000 | QUAD SO DIODE | | EA | 1.00 | 1.00 |
| CR 9003 | 007-08092-0000 | QUAD SO DIODE | | EA | 1.00 | 1.00 |
| DS 9001 | 007-06408-0000 | COM CATH 7 SEG LED | | EA | 1.00 | 1.00 |
| J 9002 | 030-02174-0000 | PIN CONT | | EA | 50.00 | 1.00 |
| P 9003 | 155-02688-0003 | RIBBON CABLE ASSY | A | EA | 1.00 | 1.00 |
| Q 9003 | 007-00065-0001 | XSTR 2N3906 (SOT) | | EA | 1.00 | 1.00 |
| Q 9006 | 007-00383-0004 | SOT-23 2N2222A XST | | EA | 1.00 | 1.00 |
| Q 9011 | 007-00530-0000 | XSTR NPN MMBT3903 | A | EA | 1.00 | 1.00 |
| R 9001 | 130-05104-0023 | RES CH 100K EW 5% | | EA | 1.00 | 1.00 |
| R 9002 | 015-00207-0020 | OCTAL SO RESISTOR | | EA | 1.00 | 1.00 |
| R 9003 | 130-05472-0023 | RES CHIP 4.7KEW5% | | EA | 1.00 | 1.00 |
| R 9004 | 130-05471-0023 | RES CHIP 470EW5% | | EA | 1.00 | 1.00 |
| R 9005 | 130-05104-0023 | RES CH 100K EW 5% | | EA | 1.00 | 1.00 |
| R 9006 | 130-05104-0023 | RES CH 100K EW 5% | | EA | 1.00 | 1.00 |
| R 9007 | 130-05000-0025 | RES CHIP 0 EW CJ | | EA | 1.00 | 1.00 |
| TP 9001 | 008-00096-0001 | TERMINAL TEST PNT | | EA | 1.00 | 1.00 |
| TP 9002 | 008-00096-0001 | TERMINAL TEST PNT | | EA | 1.00 | 1.00 |
| U 9001 | 120-02208-0004 | UPRGSSR 10MHZ16B.T | A | EA | 1.00 | 1.00 |
| U 9002 | 120-06129-0009 | 6264-15 8K X 8 RAM | | EA | 1.00 | 1.00 |
| U 9003 | 120-06129-0009 | 6264-15 8K X 8 RAM | | EA | 1.00 | 1.00 |
| U 9004 | 122-01195-9999 | *MST67 PRGMD ODD | A | RF | X. | |
| U 9005 | 122-01194-9999 | *MST67 PRGMD EVEN | A | RF | X. | |
| U 9006 | 124-00574-0003 | IC 74HCT574 | | EA | 1.00 | 1.00 |
| U 9007 | 123-00138-0003 | 74HC138 SO PKG | | EA | 1.00 | 1.00 |
| Y 9001 | 044-00069-0019 | XTAL 14.75MHZ | | EA | 1.00 | 1.00 |
| Y 9002 | 044-00293-0000 | 20 MHZ OSC | | EA | 1.00 | 1.00 |

**FIGURE 6-1 TYPICAL BILL OF MATERIAL**
**(Sheet 4 of 4)**

## 6.2 KT 76A Final Assembly

066-01062-0000 Rev. BA
066-01062-0001 Rev. 16
066-01062-0002 Rev. BA
066-01062-0010 Rev. AA
066-01062-0099 Rev. 6

| SYMBOL | EAS PART NBR | DESCRIPTION | [UOM] | -0000 | -0001 | -0002 | -0010 | -0099 |
|---|---|---|---|---|---|---|---|---|
| _ | 008-00005-0001 | TND COP LUG | [EA] | | | | | 1 |
| _ | 016-01033-0000 | CHLOROTHENE VG SPY | [AR] | | | | | 0 |
| _ | 035-01361-0001 | PROTECTIVE CVR | [EA] | | 0 | | | |
| _ | 047-03898-0002 | MOUNTING TRAY | [EA] | | | | | 1 |
| _ | 047-03962-0001 | LEFT SIDE RAIL | [EA] | | | | | 1 |
| _ | 047-03963-0002 | SIDE RAIL RGT W/H | [EA] | | | | | 1 |
| _ | 047-04500-0001 | BRACKET W/F | [EA] | | | | | 1 |
| _ | 047-04506-0002 | TOP CVR | [EA] | | | | | 1 |
| _ | 057-01589-0000 | VOLTAGE PLATE | [EA] | | | | | 1 |
| _ | 057-01821-0003 | S/N TAG | [EA] | | 1 | | | |
| _ | 057-02203-1001 | S/N TAG FLVR BLK | [EA] | | 1 | | | |
| _ | 066-01062-0099 | COMMON BOM | [EA] | | 1 | | | |
| _ | 088-00136-0005 | FLTR LAMP LT BLUE | [EA] | | 1 | | | |
| _ | 088-00276-0000 | PUSH BUTTON | [EA] | | | | | 1 |
| _ | 089-02104-0022 | NUT SPD U 4-40 | [EA] | | | | | 1 |
| _ | 089-02188-0022 | NUT LCOK 4-40 | [EA] | | | | | 2 |
| _ | 089-05903-0003 | SCR PHP 4-40X3/16 | [EA] | | | | | 1 |
| _ | 089-06293-0003 | SCR PHP 3-48X3/16 | [EA] | | | | | 6 |
| _ | 089-06293-0004 | SCR PHP 3-48X1/4 | [EA] | | | | | 8 |
| _ | 089-06298-0004 | SCR FHP 3-48X1/4 | [EA] | | | | | 8 |
| _ | 089-06366-0004 | SCR FHP 3-48X4/16 | [EA] | | 4 | | | |
| _ | 091-00286-0001 | INSUL XSTR .687 | [EA] | | | | | 1 |
| _ | 200-02019-0001 | CHASS ASSY | [EA] | | 1 | | | |
| _ | 200-02020-0002 | FACE PLATE ASSY | [EA] | | 1 | | | |
| _ | 200-05824-0040 | MAIN BOARD ASSY | [EA] | | | | | 1 |
| ITM 1 | 200-02019-0020 | B.O.M. CHASSIS ASSEMBLY | [EA] | 1 | | 1 | 1 | |
| ITM 2 | 088-00084-0008 | FLTR LAMP LT BLU | [EA] | | | 4 | | |
| ITM 3 | 088-00276-0000 | PUSH BUTTON | [EA] | 1 | | 1 | 1 | |
| ITM 5 | 200-02020-0020 | FC PLT ASY SLC | [EA] | 1 | | 1 | | |

| SYMBOL | EAS PART NBR | DESCRIPTION | [UOM] | -0000 | -0001 | -0002 | -0010 | -0099 |
|---|---|---|---|---|---|---|---|---|
| ITM 5 | 200-02020-0021 | FC PLT ASY CRN | [EA] | | | | 1 | |
| ITM 6 | 089-06310-0004 | SCR PHP 3-48X1/4 | [EA] | | | | 4 | |
| ITM 6 | 089-06366-0004 | SCR FHP 3-48X4/16 | [EA] | 4 | | 4 | | |
| ITM 7 | 057-05829-0001 | SERIAL TAG KT76A PART | [EA] | 1 | | 1 | 1 | |
| ITM 8 | 057-02203-1000 | S/N TAG FLVR BLK | [EA] | 1 | | | | |
| ITM 8 | 057-02203-1002 | S/N TAG FLVR BLK | [EA] | | | 1 | | |
| ITM 8 | 057-02203-1010 | S/N TAG FLVR BLK | [EA] | | | | 1 | |
| ITM 10 | 090-00991-0000 | PROTECTIVE CLOSURE | [EA] | 1 | | 1 | 1 | |
| ITM 11 | 047-03898-0002 | MOUNTING TRAY | [EA] | 1 | | 1 | 1 | |
| ITM 12 | 035-01361-0001 | PROTECTIVE CVR | [EA] | 1 | | 1 | 1 | |
| ITM 13 | 047-11070-0016 | COVER ASSY FINISHED | [EA] | 1 | | 1 | 1 | |
| ITM 14 | 089-05878-0005 | SCR PHP 4-40X5/16 | [EA] | 2 | | 2 | 2 | |
| REF 1 | 300-05667-0000 | KT 76A FINAL ASSY. | [RF] | X | | X | X | |

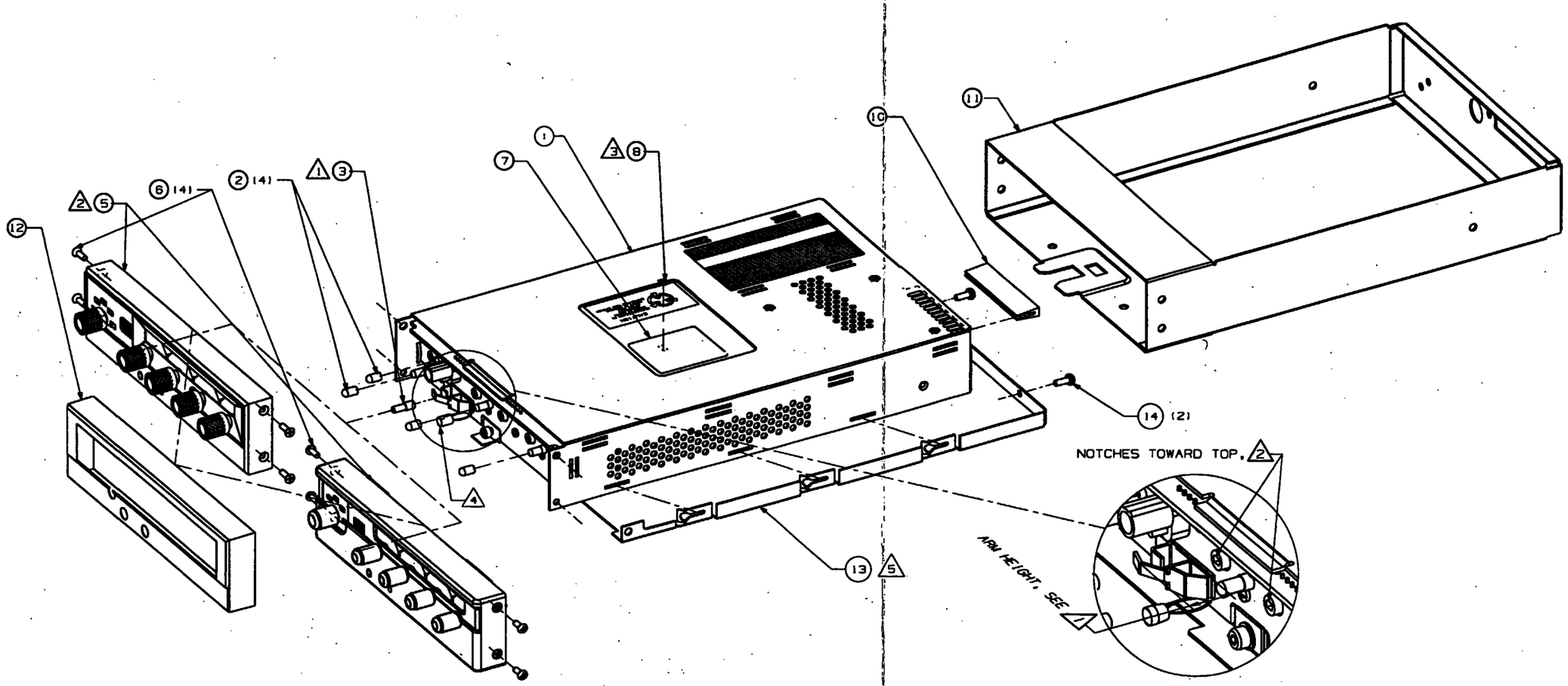


NOTES:

1. BEND SWITCH ARM OF ITEM 1 AS NECESSARY TO FIT SNUGLY AGAINST PUSHBUTTON ITEM 3. "IDENT" PUSHBUTTON MUST OPERATE SATISFACTORILY WHILE NOT BEING LOOSE. -0000 AND -0002 REQUIRE FINAL ARM HEIGHT ABOUT 0.47 INCHES (REF) ABOVE SWITCH BOARD, WHILE -0010 REQUIRES 0.55 INCHES (REF).
2. ORIENT FOUR NUMBER WHEELS OF ITEM 5 WITH "0" IN WINDOW, SELECTOR AT "OFF". SWITCH MECHANISMS OF ITEM 1 TO BE ORIENTED WITH NOTCHED FLAT SIDE OF SHAFT OPENING TOWARD TOP.
3. ITEM 8 TO BE PLACED ON ITEM 7 IN POSITION TO COMPLETE PART NUMBER AS SHOWN.
4. VISUALLY ALIGN AND POSITION PHOTOCELL AGAINST LENS IN ITEM 5.
5. INSTALL COVER, ITEM 13 TO ITEM 1 BY MATING IT TO ITEM 1 APPROXIMATELY ONE INCH BACK FROM INSTALLED LOCATION, PUSH DOWN TO MATE AND SLIDE FORWARD AS FAR AS POSSIBLE SO SCREWS, ITEM 14, CAN BE INSTALLED.

THIS DRAWING NOT COMPLETE WITHOUT PARTS LIST
066-01062-0000, 066-01062-0002 OR 066-01062-0010

**FIGURE 6-2 KT 76A/78A Final Assembly (S/N ≥ 110,000)**
**(Dwg. No. 300-05667-0000 R-AB)**

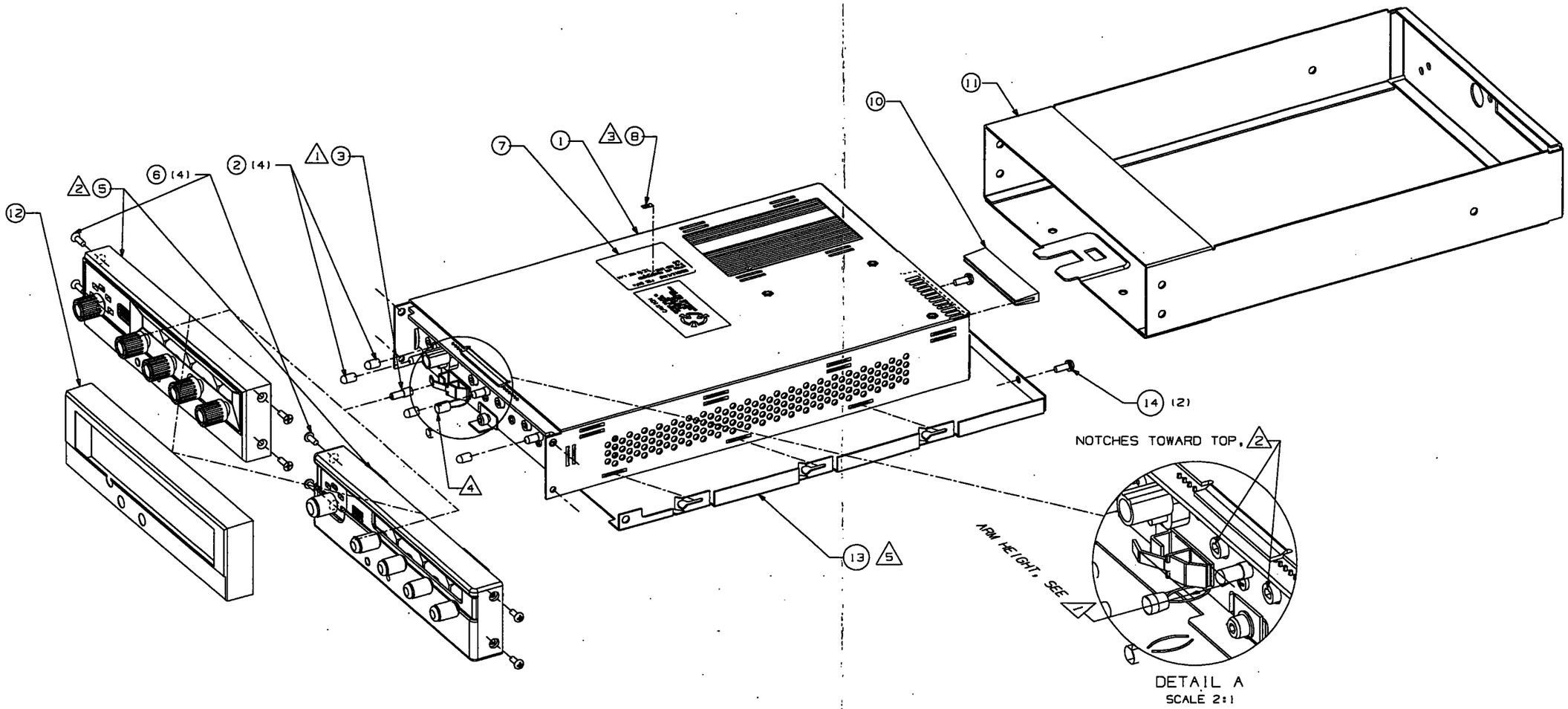


NOTES:

1. BEND SWITCH ARM OF ITEM 1 AS NECESSARY TO FIT SNUGLY AGAINST PUSHBUTTON ITEM 3. "IDENT" PUSHBUTTON MUST OPERATE SATISFACTORILY WHILE NOT BEING LOOSE. -0000 AND -0002 REQUIRE FINAL ARM HEIGHT ABOUT 0.47 INCHES (REF) ABOVE SWITCH BOARD, WHILE -0010 REQUIRES 0.55 INCHES (REF).
2. ORIENT FOUR NUMBER WHEELS OF ITEM 5 WITH "0" IN WINDOW, SELECTOR AT "OFF". SWITCH MECHANISMS OF ITEM 1 TO BE ORIENTED WITH NOTCHED FLAT SIDE OF SHAFT OPENING TOWARD TOP.
3. ITEM 8 TO BE PLACED ON ITEM 7 IN POSITION TO COMPLETE PART NUMBER AS SHOWN.
4. VISUALLY ALIGN AND POSITION PHOTOCELL AGAINST LENS IN ITEM 5.
5. INSTALL COVER, ITEM 13 TO ITEM 1 BY MATING IT TO ITEM 1 APPROXIMATELY ONE INCH BACK FROM INSTALLED LOCATION, PUSH DOWN TO MATE AND SLIDE FORWARD AS FAR AS POSSIBLE SO SCREWS, ITEM 14, CAN BE INSTALLED.

THIS DRAWING NOT COMPLETE WITHOUT PARTS LIST
066-01062-0000, 066-01062-0002 OR 066-01062-0010

300056670000R2S1

**FIGURE 6-2A KT 76A/78A Final Assembly (S/N ≥ 110,000)**
**(Dwg. No. 300-05667-0000 R-2)**

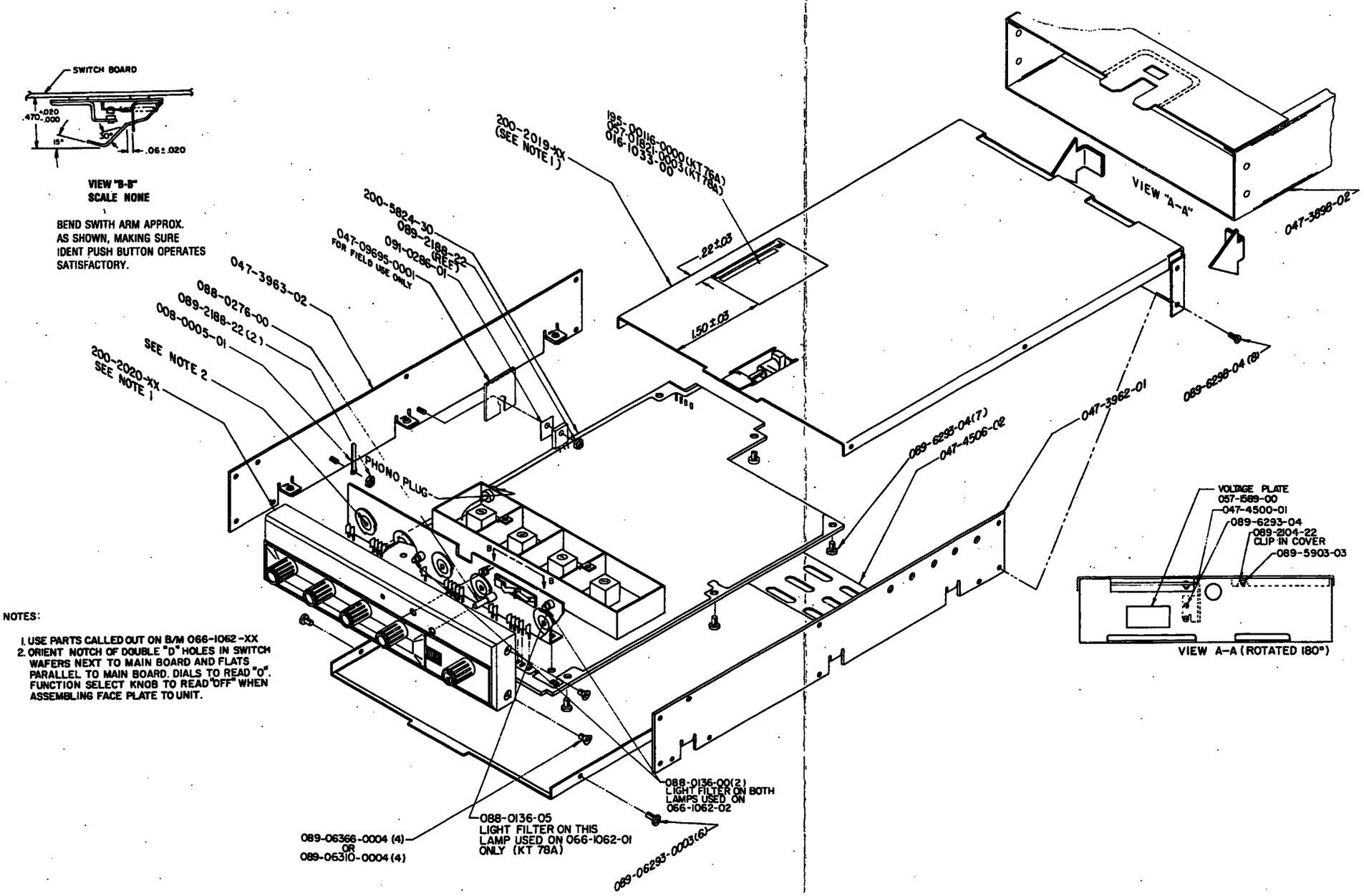


NOTES:

1. USE PARTS CALLED OUT ON B/M 066-1062-XX
2. ORIENT NOTCH OF DOUBLE "D" HOLES IN SWITCH WAFERS NEXT TO MAIN BOARD AND FLATS PARALLEL TO MAIN BOARD. DIALS TO READ "0". FUNCTION SELECT KNOB TO READ "OFF" WHEN ASSEMBLING FACE PLATE TO UNIT.

**FIGURE 6-3 KT 76A/78A Final Assembly (S/N < 110,000)**
**(Dwg. No. 300-02018-0000 R-21)**

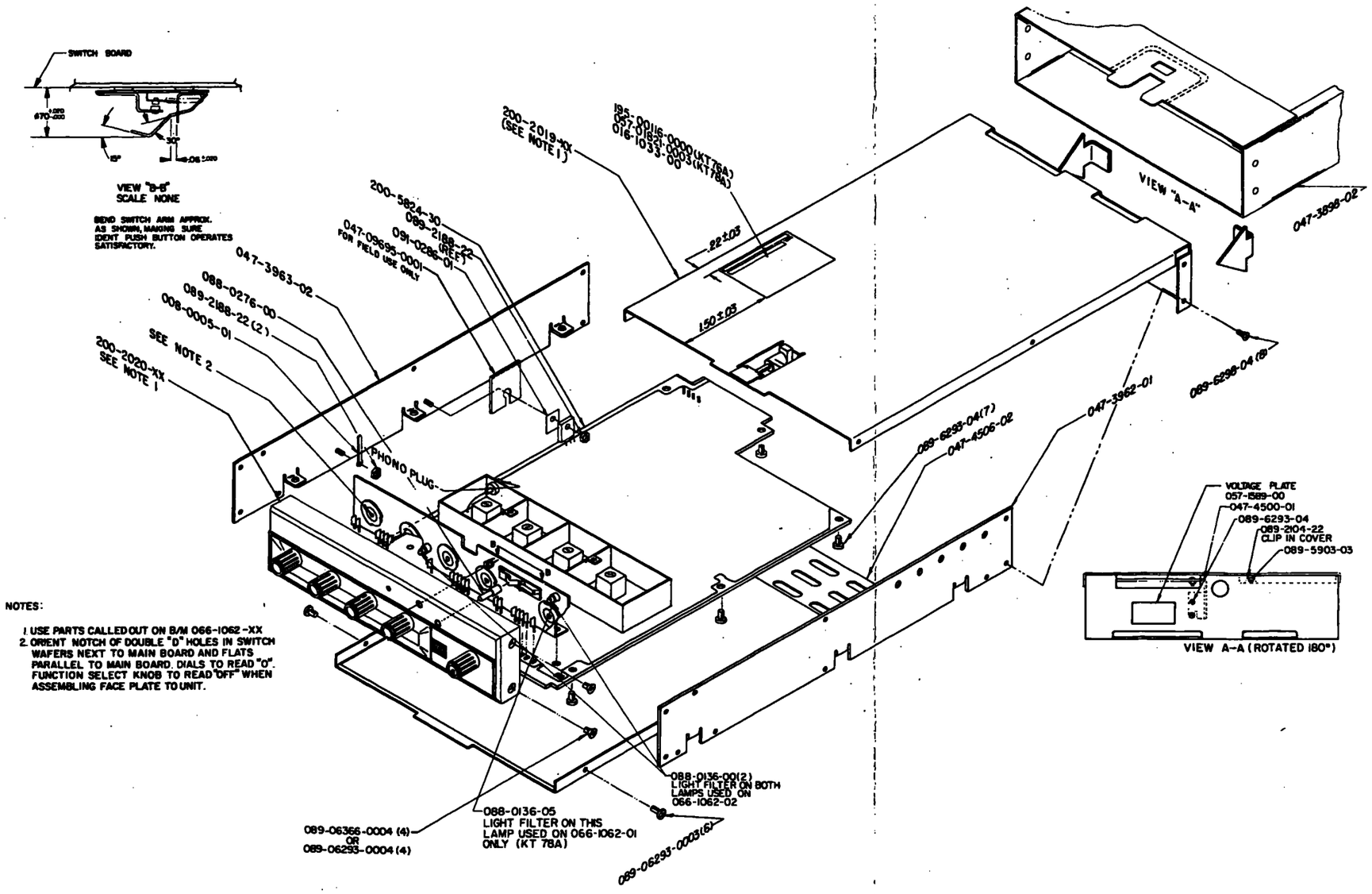


NOTES:

1. USE PARTS CALLED OUT ON B/M 066-1062-XX
2. ORIENT NOTCH OF DOUBLE "D" HOLES IN SWITCH WAFERS NEXT TO MAIN BOARD AND FLATS PARALLEL TO MAIN BOARD. DIALS TO READ "0". FUNCTION SELECT KNOB TO READ "OFF" WHEN ASSEMBLING FACE PLATE TO UNIT.

**FIGURE 6-3A KT 76A/78A Final Assembly (S/N < 110,000)**
**(Dwg. No. 300-02018-0000 R-20)**

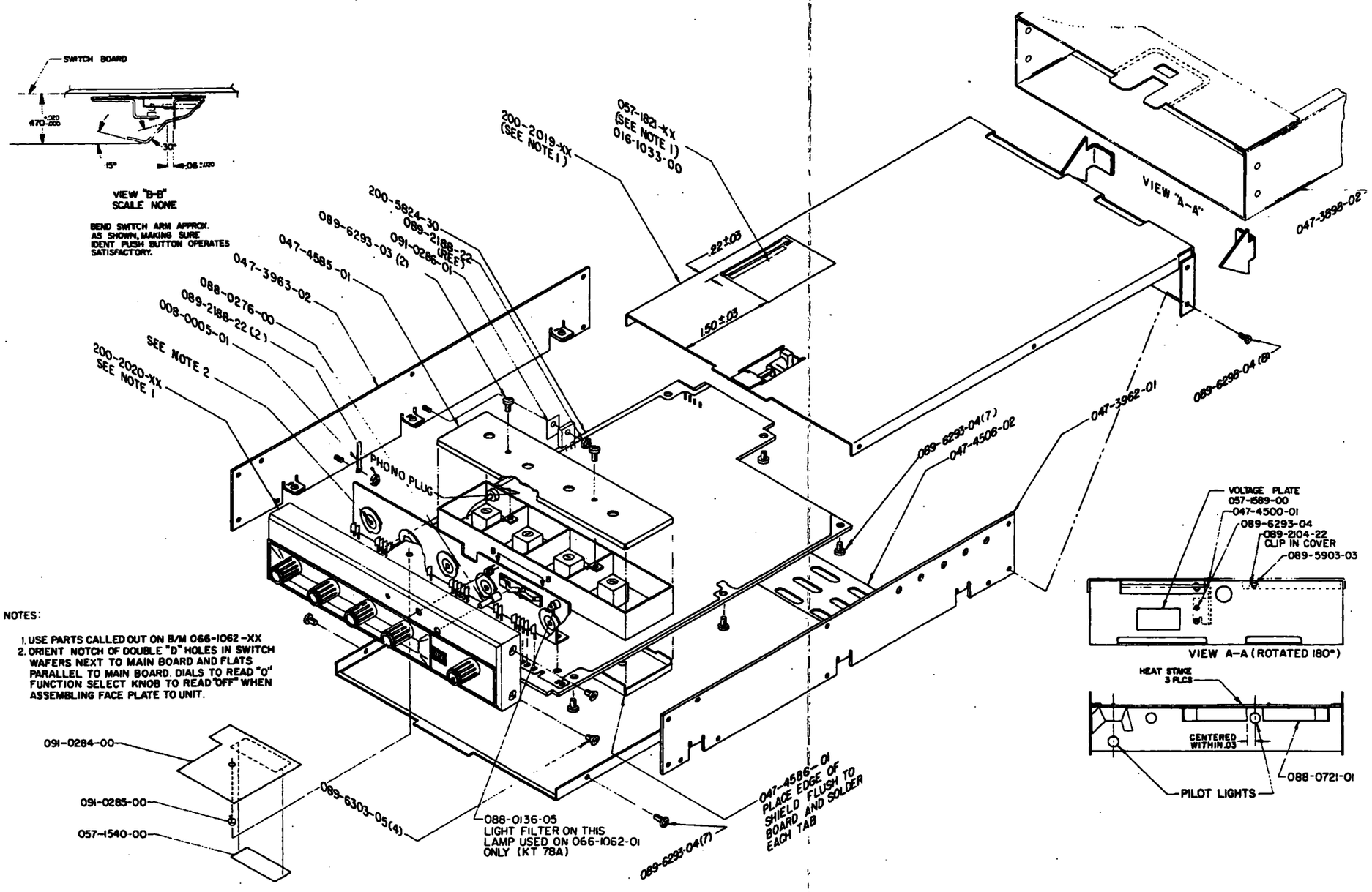


NOTES:

1. USE PARTS CALLED OUT ON B/M 066-1062-XX
2. ORIENT NOTCH OF DOUBLE "D" HOLES IN SWITCH WAFERS NEXT TO MAIN BOARD AND FLATS PARALLEL TO MAIN BOARD. DIALS TO READ "0" FUNCTION SELECT KNOB TO READ "OFF" WHEN ASSEMBLING FACE PLATE TO UNIT.

**FIGURE 6-3B KT 76A/78A Final Assembly (S/N < 110,000)**
**(Dwg. No. 300-02018-0000 R-13)**

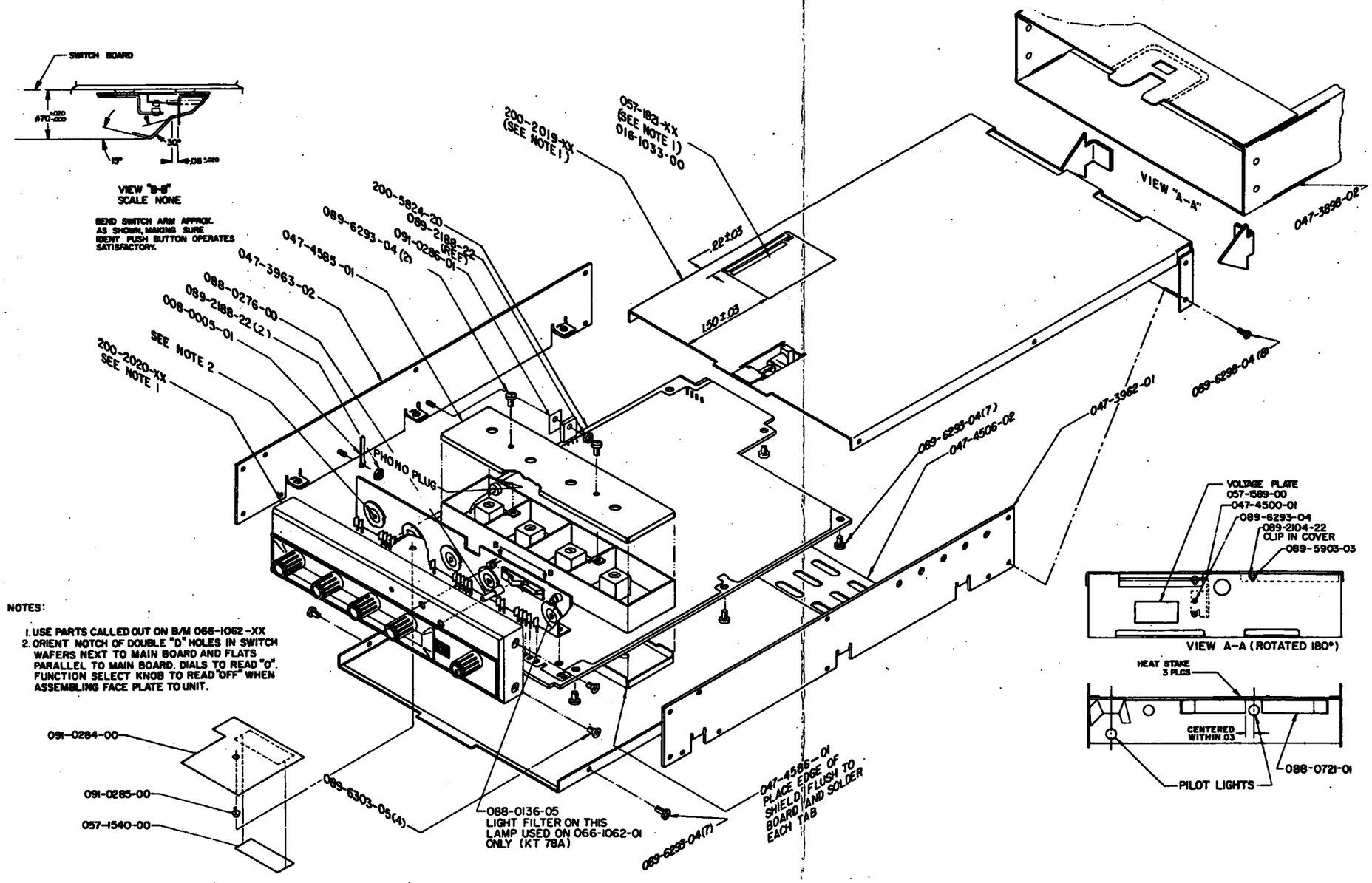


**FIGURE 6-3C KT 76A/78A Final Assembly (S/N < 110,000)**
**(Dwg. No. 300-02018-0000 R-11)**

## 6.3 200-02020-0000 Rev. 9 FACE PLATE ASSEMBLY
## 200-02020-0001 Rev. 7 FACE PLATE ASSEMBLY
## 200-02020-0002 Rev. 7 FACE PLATE ASSEMBLY
## 200-02020-0003 Rev. 7 FACE PLATE ASSEMBLY
## 200-02020-0004 Rev. 8 FACE PLATE ASSEMBLY
## 200-02020-0010 Rev. 4 FACE PLATE ASSEMBLY

| SYMBOL | PART NUMBER | DESCRIPTION | UM | QUANTITY | | | | | |
|---|---|---|---|---|---|---|---|---|---|
| | | | | -0000 | -0001 | -0002 | -0003 | -0004 | -0010 |
| | 016-01039-0000 | BLK BRSHG LCQR | [AR] | 1 | | | | | |
| | 016-01131-0000 | CNTCT CMT BND 1055 | [AR] | 1 | | | | | |
| | 047-02431-0011 | DETENT ARM | [EA] | 1 | | | | | |
| | 047-03934-0000 | SPRING FLAT | [EA] | 2 | | | | | |
| | 057-05700-0001 | LENS FILTER PART KT76 | [EA] | 1 | | | | | |
| | 078-00055-0000 | TENSION SPRING | [EA] | 1 | | | | | |
| | 088-00279-0001 | WHEEL OCTAGON | [EA] | 2 | | | | | |
| | 088-00279-0002 | WHEEL OCTAGON | [EA] | 2 | | | | | |
| | 088-00280-0001 | WHEEL OCTAGON | [EA] | | | 1 | | 1 | |
| | 088-00380-0006 | FRNT PNL W/FLENS | [EA] | | | 1 | | | |
| | 088-00380-0007 | FRONT PNL W/F LENS | [EA] | | | | | 1 | |
| | 088-00383-0000 | LENS | [EA] | 1 | | | | | |
| | 088-00655-0000 | LENS | [EA] | 1 | | | | | |
| | 088-00689-0002 | FRNT PNL W/DCLLNS | [EA] | | 1 | | | | |
| | 088-00689-0004 | FRNT PNL W/DCLLNS | [EA] | | | | 1 | | |
| | 088-00690-0001 | DETENT WHEEL 76A | [EA] | | 1 | | 1 | | 1 |
| | 088-00692-0002 | KNOB/SHAFT | [EA] | | 4 | 4 | 4 | 4 | |
| | 088-00692-0003 | KNOB/SHAFT | [EA] | | 1 | | 1 | | |
| | 088-00692-0005 | KNOB SHAFT | [EA] | | | 1 | | 1 | |
| | 088-03100-0005 | FRONT PANEL | [EA] | | | | | | 1 |
| | 088-03114-0002 | KNOB SHAFT | [EA] | | | | | | 4 |
| | 088-03114-0003 | KNOB SHAFT | [EA] | | | | | | 1 |
| | 089-02322-0000 | NUT SPD PUSH-ON | [EA] | 5 | | | | | |
| | 089-02322-0001 | NUT SPD PUSH-ON | [EA] | 5 | | | | | |
| | 200-02020-0000 | FACE PLATE ASSY | [EA] | | 1 | 1 | 1 | 1 | 1 |
| REF 1 | 300-02020-0000 | FACE PLATE ASSY | [RF] | | | | | X | |
| REF 1 | 300-02020-0010 | FACE PLATE ASSY | [RF] | | | | | | X |

## 6.3 200-02020-0020 Rev. 1 FACE PLATE ASSEMBLY
## 200-02020-0021 Rev. 0 FACE PLATE ASSEMBLY

| SYMBOL | PART NUMBER | DESCRIPTION | UM | QUANTITY | |
|---|---|---|---|---|---|
| symbol | cas_pn | standard_descr | | -0020 | -0021 |
| ITM 1 | 088-00689-0002 | FRNT PNL W/DCLLNS | [EA] | 1 | |
| ITM 1 | 088-03100-0005 | FRONT PANEL | [EA] | | 1 |
| ITM 10 | 089-02322-0000 | NUT SPD PUSH-ON | [EA] | 1 | 1 |
| ITM 11 | 088-00383-0000 | LENS | [EA] | 1 | 1 |
| ITM 12 | 088-00655-0000 | LENS | [EA] | 1 | 1 |
| ITM 13 | 016-01131-0000 | CNTCT CMT BND 1055 | [AR] | 0 | 0 |
| ITM 14 | 016-01039-0000 | BLK BRSHG LCQR | [AR] | 0 | 0 |
| ITM 2 | 088-00279-0001 | WHEEL OCTAGON | [EA] | 4 | 4 |
| ITM 3 | 088-00692-0002 | KNOB/SHAFT | [EA] | 4 | |
| ITM 3 | 088-03114-0002 | KNOB SHAFT | [EA] | | 4 |
| ITM 4 | 088-00690-0001 | DETENT WHEEL 76A | [EA] | 1 | 1 |
| ITM 5 | 088-00692-0003 | KNOB/SHAFT | [EA] | 1 | |
| ITM 5 | 088-03114-0003 | KNOB SHAFT | [EA] | | 1 |
| ITM 6 | 057-05700-0001 | LENS FILTER PART KT76 | [EA] | 1 | 1 |
| ITM 7 | 047-02431-0011 | DETENT ARM | [EA] | 1 | 1 |
| ITM 8 | 078-00055-0000 | TENSION SPRING | [EA] | 1 | 1 |
| ITM 9 | 089-02322-0001 | NUT SPD PUSH-ON | [EA] | 5 | 5 |
| REF 1 | 300-02020-0020 | FACE PLATE ASSY | [RF] | | X |

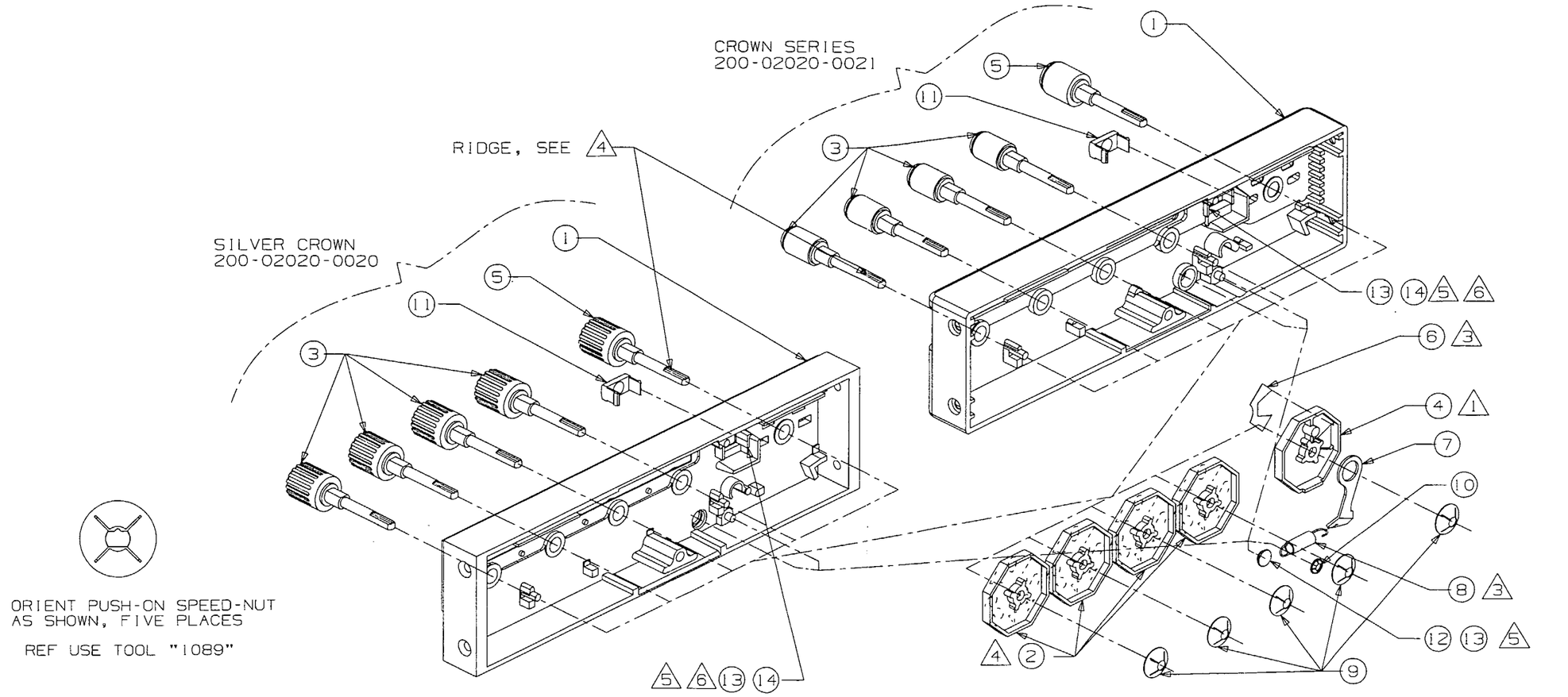


NOTES:

1. INSTALL ITEM 4 ORIENTED WITH "WINDOW" TOWARD "OFF" OF DECAL ON ITEM 1, POINTER OF KNOB ITEM 5 TOWARD "OFF."
2. SPRING ITEM 8 MUST MOVE FREELY WITHOUT CATCHING ON SIDES; INSTALLER MAY BEND SPRING IF NECESSARY.
3. ALIGN "VEE" NOTCH OF FILTER ITEM 6 WITH OPENING OF ITEM 4 WHEN INSTALLING.
4. INSTALL NUMBERED WHEELS WITH "0" SHOWING THROUGH WINDOWS, KNOB SHAFTS ITEMS 3 WITH RIDGE ORIENTED UPWARD, AS SHOWN.
5. ATTACH LENSES TO BEZELS WITH A SMALL AMOUNT OF ITEM 13 ADHESIVE. NO ADHESIVE MAY BE VISIBLE FROM THE FRONT OF THE BEZEL
6. PAINT INSIDES OF SNAP-TABS OF ITEM 11 WITH BLACK PAINT ITEM 14 AFTER INSTALLED, TO BLOCK LIGHT LEAKS OUT SIDES.

**FIGURE 6-4 KT 76A/78A Face Plate Assembly (S/N ≥ 110,000)**
**(Dwg. No. 300-02020-0020 R-0)**

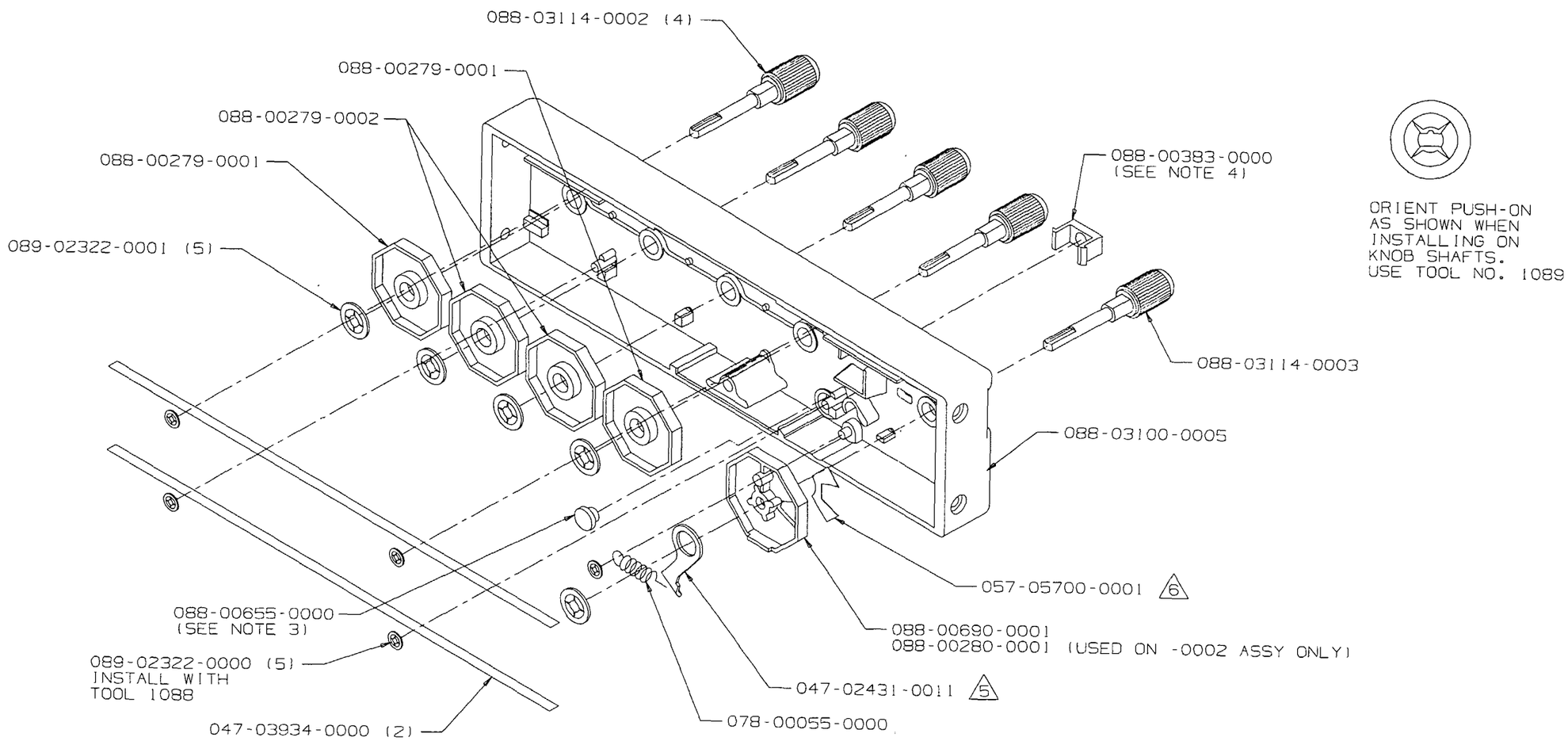


NOTES:

1. ALL NUMBERED WHEELS SET WITH "0" IN WINDOW.
2. FUNCTION SELECTOR WHEEL SET AT OFF POSITION.
3. ATTACH LENS (088-0655-0000) TO HOLE IN FRONT PANEL USING SMALL AMOUNT OF ADHESIVE (016-01131-0000).
4. PAINT TABS PROTRUDING THRU BACK OF FRONT PANEL (088-03100-0005), WITH BRUSHING LACQUER (016-01039-0000 AFTER THIS PART IS INSTALLED IN FRONT PLATE.

5. ASSEMBLER MAY BEND SPRING 078-00055-0000 IF NECESSARY TO ENSURE IT MOVES FREELY AND QUIETLY.

6. ALIGN FILTER "VEE" WITH OPENING ON OCTAGONAL WHEEL WHEN INSTALLING.

300020200010R2S1

**FIGURE 6-5 KT 76A/78A Face Plate Assembly (S/N <110,000)**
**(Dwg. No. 300-02020-0010 R-2)**

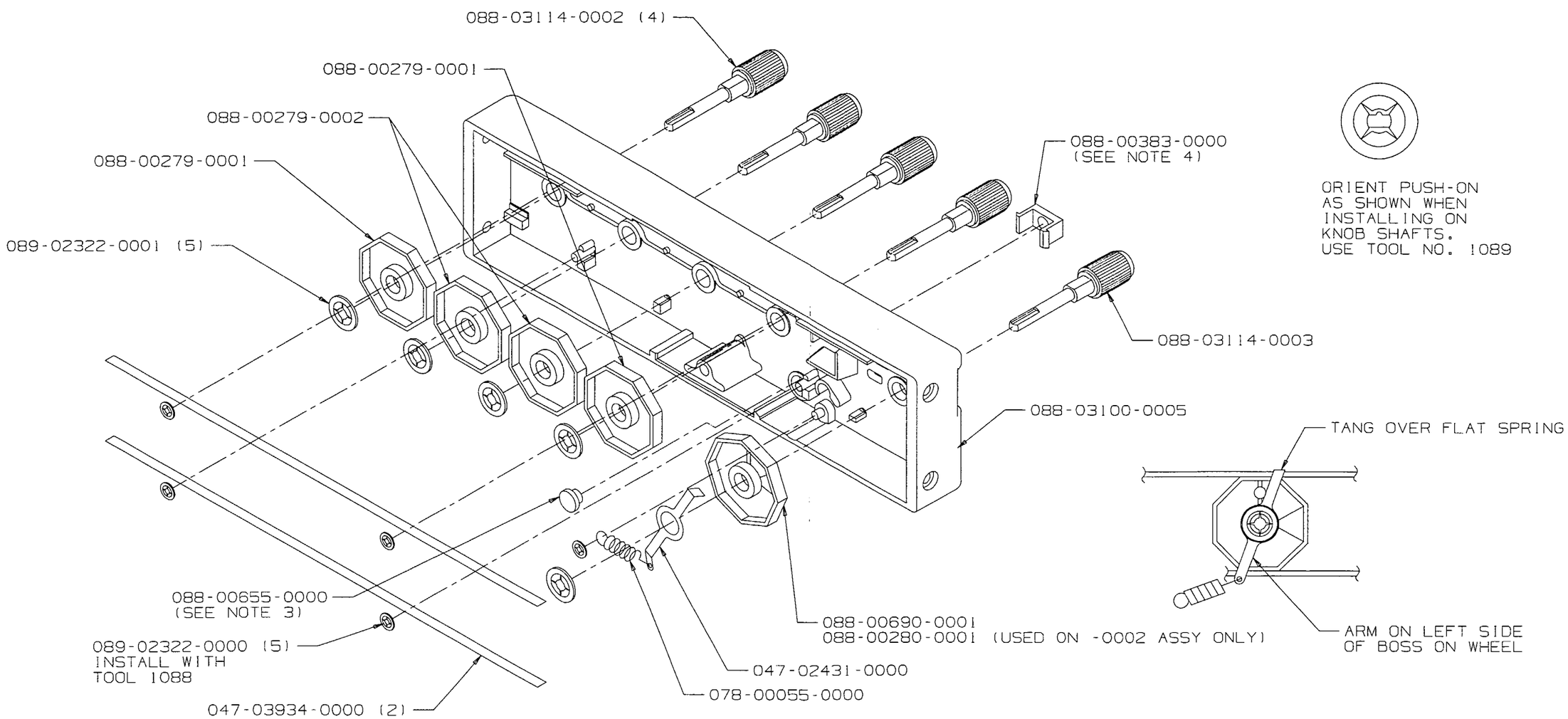


NOTES:

1. ALL NUMBERED WHEELS SET WITH "0" IN WINDOW.
2. FUNCTION SELECTOR WHEEL SET AT OFF POSITION.
3. ATTACH LENS (088-0655-0000) TO HOLE IN FRONT PANEL USING SMALL AMOUNT OF ADHESIVE (016-01131-0000).
4. PAINT TABS PROTRUDING THRU BACK OF FRONT PANEL (088-03100-0005), WITH BRUSHING LACQUER (016-01039-0000 AFTER THIS PART IS INSTALLED IN FRONT PLATE.

300020200010R1S1

**FIGURE 6-5A KT 76A/78A Face Plate Assembly (S/N <110,000)**
**(Dwg. No. 300-02020-0010 R-1)**

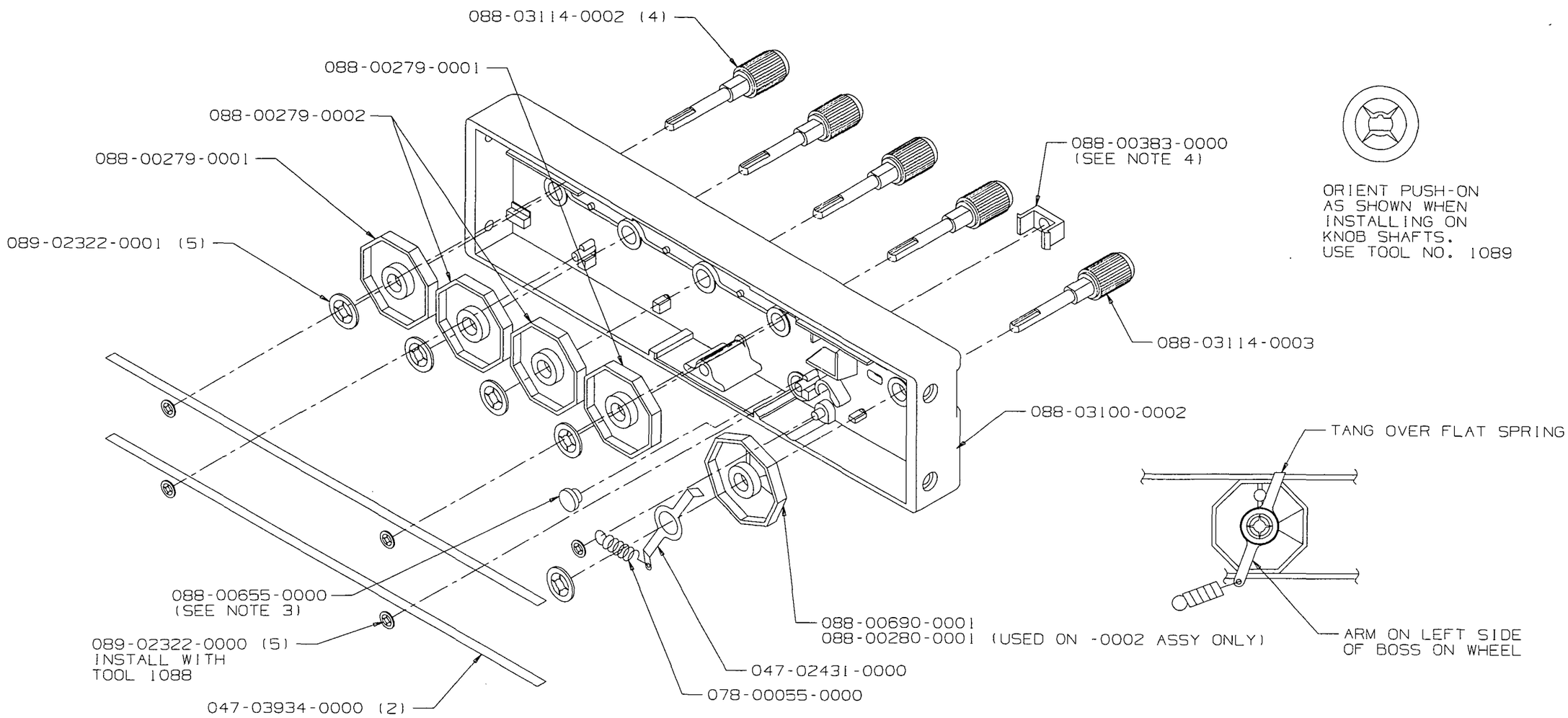


NOTES:

1. ALL NUMBERED WHEELS SET WITH "0" IN WINDOW.
2. FUNCTION SELECTOR WHEEL SET AT OFF POSITION.
3. ATTACH LENS (088-0655-0000) TO HOLE IN FRONT PANEL USING SMALL AMOUNT OF ADHESIVE (016-01131-0000).
4. PAINT TABS PROTRUDING THRU BACK OF FRONT PANEL (088-03100-0004), WITH BRUSHING LACQUER (016-01039-0000 AFTER THIS PART IS INSTALLED IN FRONT PLATE.

30002020001 0R0S1

**FIGURE 6-5B KT 76A/78A Face Plate Assembly (S/N <110,000)**
**(Dwg. No. 300-02020-0010 R-0)**

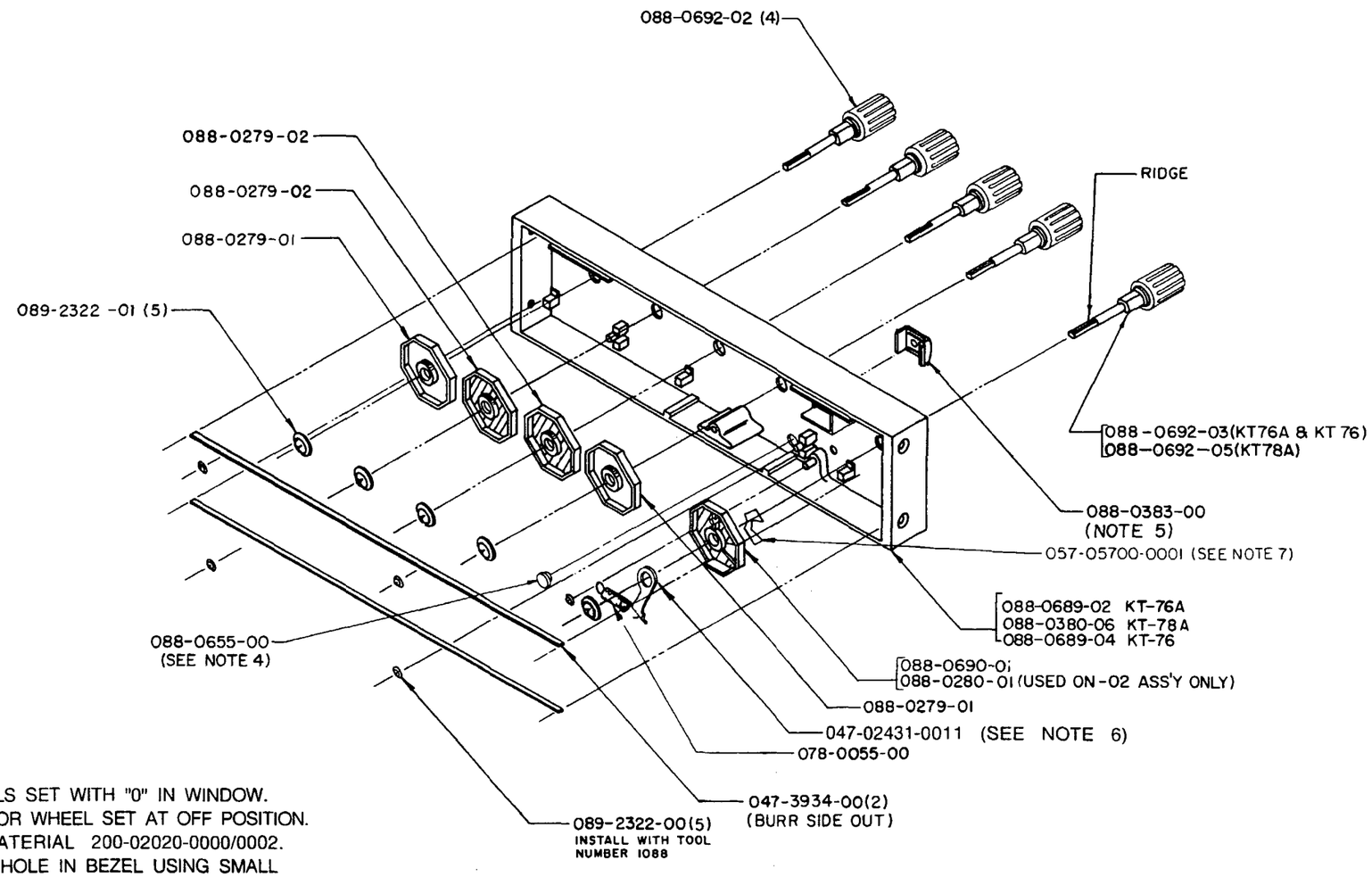


NOTES:

1. NUMBERED WHEELS SET WITH "0" IN WINDOW.
2. FUNCTION SELECTOR WHEEL SET AT OFF POSITION.
3. SEE BILL OF MATERIAL 200-02020-0000/0002.
4. ATTACH LENS TO HOLE IN BEZEL USING SMALL AMOUNT OF ADHESIVE PER KING P/N 016-01131-0000.
5. PAINT TABS PROTRUDING THRU BACK OF FACEPLATE WITH BRUSHING LACQUER 016-01039-0000 AFTER THIS PART IS INSTALLED IN FACEPLATE.
6. ASSEMBLER MAY BEND SPRING 078-00055-0000 IF NECESSARY TO INSURE SPRING MOVES FREELY AND QUIETLY.
7. ALIGN FILTER "VEE" WITH OPENING ON OCTAGONAL WHEEL WHEN INSTALLING.

ORIENT PUSH-ON
AS SHOWN WHEN
INSTALLING ON KNOB SHAFTS.
USE TOOL NO. 1089

**FIGURE 6-6 KT 76A/78A Face Plate Assembly (S/N <110,000)**
**(Dwg. No. 300-02020-0000 R-7)**

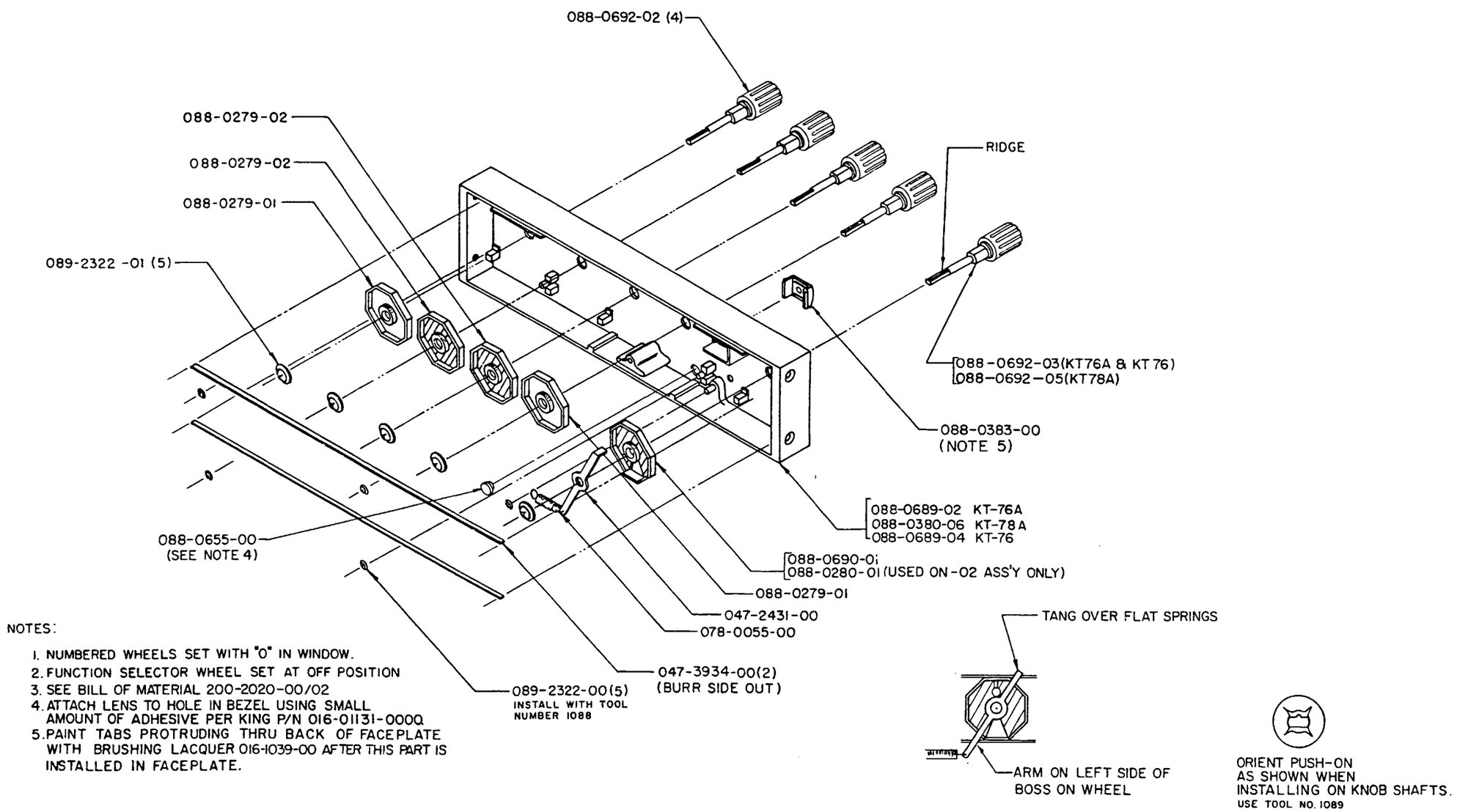


NOTES:

1. NUMBERED WHEELS SET WITH "0" IN WINDOW.
2. FUNCTION SELECTOR WHEEL SET AT OFF POSITION
3. SEE BILL OF MATERIAL 200-2020-00/02
4. ATTACH LENS TO HOLE IN BEZEL USING SMALL AMOUNT OF ADHESIVE PER KING P/N 016-01131-000Q
5. PAINT TABS PROTRUDING THRU BACK OF FACEPLATE WITH BRUSHING LACQUER 016-1039-00 AFTER THIS PART IS INSTALLED IN FACEPLATE.

**FIGURE 6-6A KT 76A/78A Face Plate Assembly (S/N <110,000)**
**(Dwg. No. 300-02020-0000 R-5)**

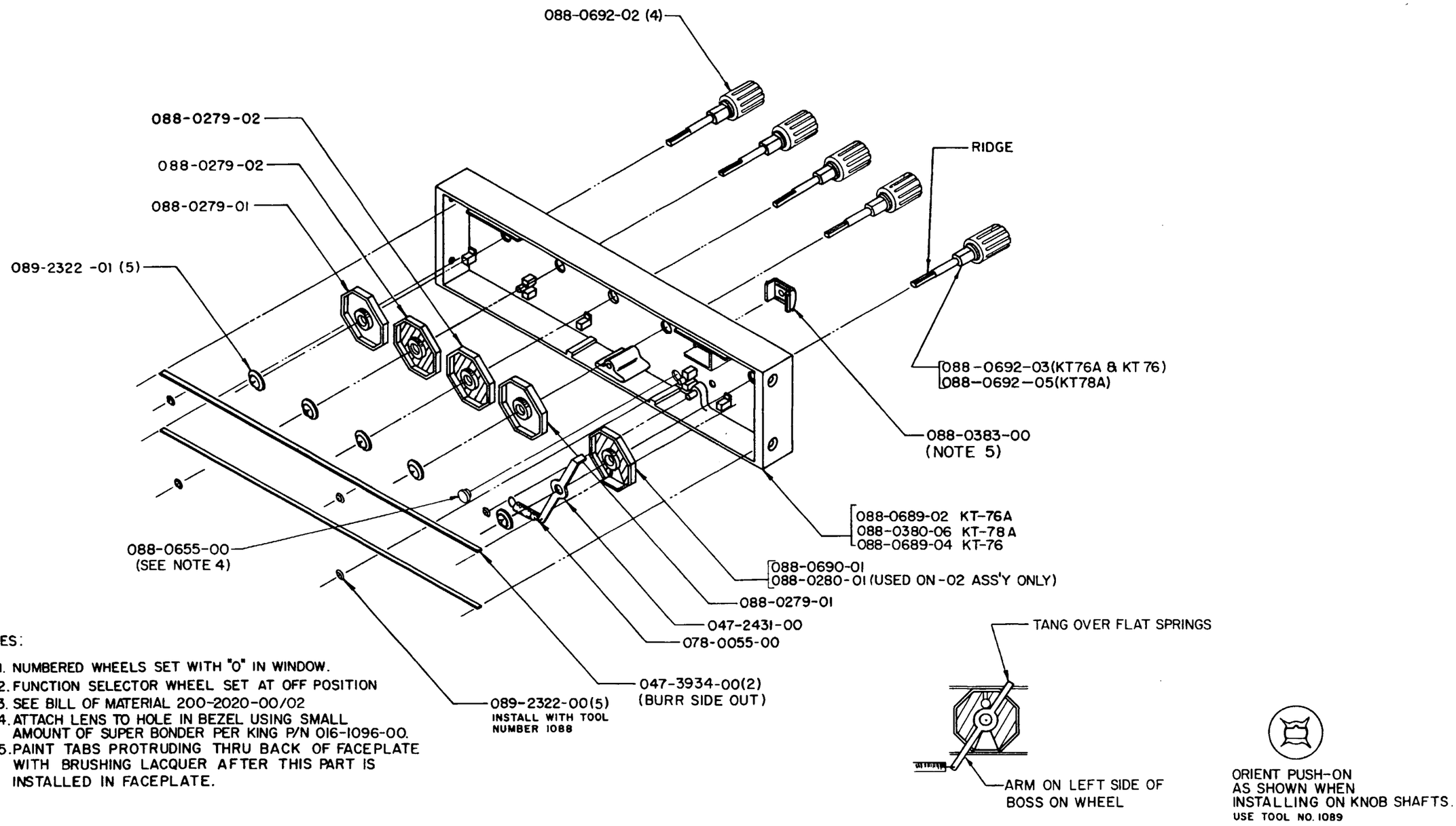


NOTES:

1. NUMBERED WHEELS SET WITH "0" IN WINDOW.
2. FUNCTION SELECTOR WHEEL SET AT OFF POSITION
3. SEE BILL OF MATERIAL 200-2020-00/02
4. ATTACH LENS TO HOLE IN BEZEL USING SMALL AMOUNT OF SUPER BONDER PER KING P/N 016-1096-00.
5. PAINT TABS PROTRUDING THRU BACK OF FACEPLATE WITH BRUSHING LACQUER AFTER THIS PART IS INSTALLED IN FACEPLATE.

**FIGURE 6-6B KT 76A/78A Face Plate Assembly (S/N <110,000)**
**(Dwg. No. 300-02020-0000 R-3)**

## 6.4 200-09070-0000 Rev. AA MAIN BOARD
## 200-09070-0020 Rev. K MAIN BOARD

| SYMBOL | EAS PART NBR | DESCRIPTION | [UOM] | -0000 | -0020 |
|---|---|---|---|---|---|
| _ | 126-00138-0002 | KT 76A FIRMWARE | [EA] | 1 | |
| _ | 126-00138-0003 | FIRMWARE | [EA] | | 1 |
| C 1 | 106-04104-0047 | CH 100KX7R/50V | [EA] | 1 | 1 |
| C 2 | 096-01186-0014 | CAP 10.0UF 16V 10% | [EA] | 1 | 1 |
| C 3 | 106-04103-0057 | CAP CH 10KX7R/100V | [EA] | 1 | 1 |
| C 4 | 096-01186-0014 | CAP 10.0UF 16V 10% | [EA] | 1 | 1 |
| C 5 | 096-01186-0014 | CAP 10.0UF 16V 10% | [EA] | 1 | 1 |
| C 6 | 096-01186-0014 | CAP 10.0UF 16V 10% | [EA] | | 1 |
| C 6 | 096-01186-0036 | CAP 10UF 35V 10% | [EA] | 1 | |
| C 7 | 106-05681-0016 | CAP CH680PFNPO/50V | [EA] | 1 | 1 |
| C 8 | 106-04103-0057 | CAP CH 10KX7R/100V | [EA] | 1 | 1 |
| C 9 | 106-04103-0057 | CAP CH 10KX7R/100V | [EA] | 1 | 1 |
| C 10 | 096-01186-0014 | CAP 10.0UF 16V 10% | [EA] | 1 | 1 |
| C 11 | 106-04104-0047 | CH 100KX7R/50V | [EA] | 1 | 1 |
| C 12 | 106-04103-0057 | CAP CH 10KX7R/100V | [EA] | 1 | 1 |
| C 13 | 106-04104-0047 | CH 100KX7R/50V | [EA] | 1 | 1 |
| C 14 | 106-04103-0057 | CAP CH 10KX7R/100V | [EA] | 1 | 1 |
| C 15 | 106-05681-0016 | CAP CH680PFNPO/50V | [EA] | 1 | 1 |
| C 16 | 096-01186-0014 | CAP 10.0UF 16V 10% | [EA] | 1 | 1 |
| C 17 | 106-05103-0057 | CAP CH 10KX7R/100V | [EA] | 1 | 1 |
| C 18 | 096-01186-0014 | CAP 10.0UF 16V 10% | [EA] | | 1 |
| C 18 | 096-01186-0036 | CAP 10UF 35V 10% | [EA] | 1 | |
| C 19 | 106-05330-0026 | CAP CH33PFNPO/100V | [EA] | 1 | 1 |
| C 20 | 106-05330-0026 | CAP CH33PFNPO/100V | [EA] | 1 | 1 |
| C 21 | 106-04104-0047 | CH 100KX7R/50V | [EA] | 1 | 1 |
| C 22 | 106-05103-0057 | CAP CH 10KX7R/100V | [EA] | 1 | 1 |
| C 23 | 106-04104-0047 | CH 100KX7R/50V | [EA] | 1 | 1 |
| C 24 | 106-05391-0026 | CAP CH390PFNPO/100 | [EA] | 1 | 1 |
| C 28 | 106-05103-0057 | CAP CH 10KX7R/100V | [EA] | 1 | |
| C 29 | 106-04103-0057 | CAP CH 10KX7R/100V | [EA] | 1 | 1 |
| C 30 | 106-05681-0016 | CAP CH680PFNPO/50V | [EA] | 1 | 1 |
| C 31 | 106-05681-0016 | CAP CH680PFNPO/50V | [EA] | | 1 |
| C 32 | 106-05681-0016 | CAP CH680PFNPO/50V | [EA] | 1 | 1 |
| C 33 | 106-04104-0047 | CH 100KX7R/50V | [EA] | 1 | 1 |
| C 34 | 096-01186-0014 | CAP 10.0UF 16V 10% | [EA] | 1 | 1 |
| C 35 | 106-04103-0057 | CAP CH 10KX7R/100V | [EA] | 1 | 1 |
| C 36 | 106-05391-0026 | CAP CH390PFNPO/100 | [EA] | 1 | 1 |
| C 37 | 096-01186-0014 | CAP 10.0UF 16V 10% | [EA] | 1 | 1 |
| C 38 | 106-04103-0057 | CAP CH 10KX7R/100V | [EA] | 1 | 1 |

| | | | | | |
|---|---|---|---|---|---|
| C 39 | 106-04103-0057 | CAP CH 10KX7R/100V | [EA] | 1 | 1 |
| C 40 | 106-04104-0047 | CH 100KX7R/50V | [EA] | 1 | 1 |
| C 41 | 106-04104-0047 | CH 100KX7R/50V | [EA] | 1 | 1 |
| C 42 | 106-05681-0016 | CAP CH680PFNPO/50V | [EA] | 1 | 1 |
| C 43 | 117-07103-0000 | CAP DC .01UF 2KV | [EA] | 1 | 1 |
| C 44 | 117-07103-0000 | CAP DC .01UF 2KV | [EA] | 1 | 1 |
| C 45 | 101-00005-0000 | CAP PP .05UF 2KV | [EA] | 1 | 1 |
| C 46 | 106-04103-0057 | CAP CH 10KX7R/100V | [EA] | 1 | 1 |
| C 47 | 106-05391-0026 | CAP CH390PFNPO/100 | [EA] | 1 | 1 |
| C 48 | 106-04103-0057 | CAP CH 10KX7R/100V | [EA] | 1 | 1 |
| C 49 | 106-05330-0026 | CAP CH33PFNPO/100V | [EA] | 1 | 1 |
| C 50 | 106-05330-0026 | CAP CH33PFNPO/100V | [EA] | 1 | 1 |
| C 51 | 106-04104-0047 | CH 100KX7R/50V | [EA] | 1 | 1 |
| C 52 | 106-04103-0057 | CAP CH 10KX7R/100V | [EA] | 1 | 1 |
| C 53 | 106-05391-0026 | CAP CH390PFNPO/100 | [EA] | 1 | 1 |
| C 54 | 106-04104-0047 | CH 100KX7R/50V | [EA] | 1 | |
| C 55 | 106-05681-0016 | CAP CH680PFNPO/50V | [EA] | 1 | 1 |
| C 57 | 106-05101-0026 | CAPCH100PFNPO/100V | [EA] | 1 | 1 |
| C 58 | 106-05391-0026 | CAP CH390PFNPO/100 | [EA] | 1 | 1 |
| C 59 | 106-05391-0026 | CAP CH390PFNPO/100 | [EA] | 1 | 1 |
| C 60 | 106-05681-0016 | CAP CH680PFNPO/50V | [EA] | 1 | 1 |
| C 61 | 106-04103-0057 | CAP CH 10KX7R/100V | [EA] | 1 | 1 |
| C 62 | 106-04104-0047 | CH 100KX7R/50V | [EA] | 1 | |
| C 62 | 106-05103-0057 | CAP CH 10KX7R/100V | [EA] | | 1 |
| C 63 | 106-05681-0016 | CAP CH680PFNPO/50V | [EA] | 1 | |
| C 64 | 106-04104-0047 | CH 100KX7R/50V | [EA] | 1 | |
| C 65 | 106-04103-0057 | CAP CH 10KX7R/100V | [EA] | 1 | 1 |
| C 66 | 106-04104-0047 | CH 100KX7R/50V | [EA] | 1 | |
| C 67 | 106-05681-0016 | CAP CH680PFNPO/50V | [EA] | 1 | 1 |
| C 68 | 106-05101-0026 | CAPCH100PFNPO/100V | [EA] | 1 | 1 |
| C 69 | 106-04103-0057 | CAP CH 10KX7R/100V | [EA] | 1 | 1 |
| C 70 | 106-05681-0016 | CAP CH680PFNPO/50V | [EA] | 1 | 1 |
| C 71 | 106-05391-0026 | CAP CH390PFNPO/100 | [EA] | 1 | 1 |
| C 72 | 106-04104-0047 | CH 100KX7R/50V | [EA] | 1 | 1 |
| C 73 | 106-04103-0057 | CAP CH 10KX7R/100V | [EA] | 1 | 1 |
| C 74 | 106-05391-0026 | CAP CH390PFNPO/100 | [EA] | 1 | 1 |
| C 75 | 106-05103-0057 | CAP CH 10KX7R/100V | [EA] | 1 | 1 |
| C 76 | 106-05330-0026 | CAP CH33PFNPO/100V | [EA] | 1 | 1 |
| C 77 | 106-05101-0026 | CAPCH100PFNPO/100V | [EA] | 1 | |
| C 77 | 106-05330-0026 | CAP CH33PFNPO/100V | [EA] | | 1 |
| C 78 | 106-05681-0016 | CAP CH680PFNPO/50V | [EA] | 1 | 1 |
| C 79 | 106-05569-0020 | CAP CH 5.6 PF | [EA] | 1 | 1 |
| C 80 | 106-04104-0047 | CH 100KX7R/50V | [EA] | 1 | 1 |
| C 81 | 106-05681-0016 | CAP CH680PFNPO/50V | [EA] | 1 | 1 |

| | | | | | |
|---|---|---|---|---|---|
| C 82 | 106-05681-0016 | CAP CH680PFNPO/50V | [EA] | 1 | 1 |
| C 83 | 106-05330-0026 | CAP CH33PFNPO/100V | [EA] | 1 | 1 |
| C 84 | 106-04104-0047 | CH 100KX7R/50V | [EA] | 1 | 1 |
| C 85 | 106-05030-0020 | CH 3.0PF NPO/100V | [EA] | 1 | 1 |
| C 86 | 106-05100-0023 | CAP CH 10PF NPO100 | [EA] | 1 | 1 |
| C 87 | 106-04104-0047 | CH 100KX7R/50V | [EA] | 1 | 1 |
| C 88 | 106-05103-0057 | CAP CH 10KX7R/100V | [EA] | 1 | 1 |
| C 89 | 106-05681-0016 | CAP CH680PFNPO/50V | [EA] | 1 | 1 |
| C 90 | 106-05391-0026 | CAP CH390PFNPO/100 | [EA] | 1 | 1 |
| C 91 | 096-01186-0032 | CAP 2.2UF 35V 10% | [EA] | 1 | 1 |
| C 92 | 106-05103-0057 | CAP CH 10KX7R/100V | [EA] | 1 | 1 |
| C 93 | 106-05391-0026 | CAP CH390PFNPO/100 | [EA] | 1 | 1 |
| C 94 | 106-05681-0016 | CAP CH680PFNPO/50V | [EA] | 1 | 1 |
| C 95 | 106-05391-0026 | CAP CH390PFNPO/100 | [EA] | 1 | 1 |
| C 96 | 106-05030-0020 | CH 3.0PF NPO/100V | [EA] | 1 | 1 |
| C 97 | 106-05100-0023 | CAP CH 10PF NPO100 | [EA] | 1 | 1 |
| C 98 | 106-05100-0023 | CAP CH 10PF NPO100 | [EA] | 1 | 1 |
| C 99 | 106-05100-0023 | CAP CH 10PF NPO100 | [EA] | 1 | 1 |
| C 100 | 106-04103-0057 | CAP CH 10KX7R/100V | [EA] | 1 | 1 |
| C 101 | 106-05391-0026 | CAP CH390PFNPO/100 | [EA] | 1 | 1 |
| C 102 | 106-05330-0026 | CAP CH33PFNPO/100V | [EA] | 1 | 1 |
| C 103 | 106-05101-0026 | CAPCH100PFNPO/100V | [EA] | 1 | 1 |
| C 104 | 096-01186-0014 | CAP 10.0UF 16V 10% | [EA] | 1 | 1 |
| C 105 | 106-04104-0047 | CH 100KX7R/50V | [EA] | 1 | 1 |
| C 106 | 106-05391-0026 | CAP CH390PFNPO/100 | [EA] | 1 | 1 |
| C 107 | 106-05103-0057 | CAP CH 10KX7R/100V | [EA] | 1 | 1 |
| C 108 | 106-05150-0026 | CAP CH15PFNPO/100V | [EA] | 1 | 1 |
| C 109 | 106-05681-0016 | CAP CH680PFNPO/50V | [EA] | 1 | 1 |
| C 111 | 106-04103-0057 | CAP CH 10KX7R/100V | [EA] | 1 | 1 |
| C 112 | 106-05330-0026 | CAP CH33PFNPO/100V | [EA] | 1 | 1 |
| C 113 | 106-05150-0026 | CAP CH15PFNPO/100V | [EA] | 1 | 1 |
| C 114 | 106-05330-0026 | CAP CH33PFNPO/100V | [EA] | 1 | 1 |
| C 115 | 106-04103-0057 | CAP CH 10KX7R/100V | [EA] | 1 | 1 |
| C 116 | 106-05150-0026 | CAP CH15PFNPO/100V | [EA] | 1 | 1 |
| C 117 | 097-00096-0015 | CAP EL 150UF 63V | [EA] | 1 | |
| C 117 | 097-00214-0003 | CAP AL 180UF 50V | [EA] | | 1 |
| C 118 | 096-01186-0014 | CAP 10.0UF 16V 10% | [EA] | 1 | 1 |
| C 119 | 106-05681-0016 | CAP CH680PFNPO/50V | [EA] | 1 | 1 |
| C 120 | 106-05101-0026 | CAPCH100PFNPO/100V | [EA] | 1 | 1 |
| C 121 | 106-05150-0026 | CAP CH15PFNPO/100V | [EA] | 1 | 1 |
| C 122 | 106-05150-0026 | CAP CH15PFNPO/100V | [EA] | 1 | 1 |
| C 123 | 106-05330-0026 | CAP CH33PFNPO/100V | [EA] | 1 | 1 |
| C 124 | 106-05681-0016 | CAP CH680PFNPO/50V | [EA] | 1 | |
| C 125 | 106-05330-0026 | CAP CH33PFNPO/100V | [EA] | 1 | 1 |

| | | | | | | |
|---|---|---|---|---|---|---|
| C 126 | 106-05689-0020 | CH 6.8PF NPO/100V | | [EA] | 1 | 1 |
| C 127 | 106-05100-0023 | CAP CH 10PF NPO100 | | [EA] | 1 | 1 |
| C 128 | 106-04104-0047 | CH 100KX7R/50V | | [EA] | 1 | 1 |
| C 129 | 106-05681-0016 | CAP CH680PFNPO/50V | | [EA] | 1 | 1 |
| C 130 | 106-04759-0020 | CAP CH 7.5 NPO/100 | | [EA] | 1 | 1 |
| C 131 | 106-04759-0020 | CAP CH 7.5 NPO/100 | | [EA] | 1 | 1 |
| C 132 | 106-04759-0020 | CAP CH 7.5 NPO/100 | | [EA] | 1 | 1 |
| C 133 | 106-04759-0020 | CAP CH 7.5 NPO/100 | | [EA] | 1 | 1 |
| C 134 | 106-05470-0023 | CAP CH 47PF NPO | | [EA] | 1 | 1 |
| C 135 | 106-05240-0023 | CAP CH 24PF NPO | | [EA] | 1 | 1 |
| C 136 | 106-05820-0023 | 82PF 100V 1% CHIP CAP | | [EA] | 1 | 1 |
| C 137 | 096-01186-0014 | CAP 10.0UF 16V 10% | | [EA] | 1 | 1 |
| C 138 | 096-01186-0014 | CAP 10.0UF 16V 10% | | [EA] | 1 | 1 |
| C 139 | 106-05101-0026 | CAPCH100PFNPO/100V | | [EA] | 1 | 1 |
| C 140 | 106-05103-0057 | CAP CH 10KX7R/100V | | [EA] | 1 | 1 |
| C 141 | 106-05103-0057 | CAP CH 10KX7R/100V | | [EA] | 1 | 1 |
| C 142 | 106-05101-0026 | CAPCH100PFNPO/100V | | [EA] | 1 | 1 |
| C 143 | 106-04104-0047 | CH 100KX7R/50V | | [EA] | 1 | 1 |
| C 144 | 106-05681-0016 | CAP CH680PFNPO/50V | | [EA] | 1 | 1 |
| C 145 | 106-05101-0026 | CAPCH100PFNPO/100V | | [EA] | 1 | 1 |
| C 146 | 106-05101-0026 | CAPCH100PFNPO/100V | | [EA] | 1 | 1 |
| C 147 | 106-05101-0026 | CAPCH100PFNPO/100V | | [EA] | 1 | 1 |
| C 148 | 106-05101-0026 | CAPCH100PFNPO/100V | | [EA] | 1 | 1 |
| C 149 | 106-04104-0047 | CH 100KX7R/50V | | [EA] | 1 | 1 |
| C 150 | 106-05820-0023 | 82PF 100V 1% CHIP CAP | | [EA] | 1 | 1 |
| C 151 | 106-05100-0023 | CAP CH 10PF NPO100 | | [EA] | 1 | 1 |
| C 152 | 106-04104-0047 | CH 100KX7R/50V | | [EA] | 1 | 1 |
| C 153 | 097-00204-0027 | CAP AL 100UF 16V 20% S | | [EA] | | 1 |
| C 153 | 097-00214-0002 | CAP AL 220UF 25V | | [EA] | 1 | |
| C 154 | 097-00204-0027 | CAP AL 100UF 16V 20% S | | [EA] | | 1 |
| C 154 | 097-00214-0002 | CAP AL 220UF 25V | | [EA] | 1 | |
| C 155 | 106-05472-0057 | CAPCH4700PFX7R/100 | | [EA] | 1 | 1 |
| C 156 | 106-05681-0016 | CAP CH680PFNPO/50V | | [EA] | | 1 |
| C 157 | 106-05681-0016 | CAP CH680PFNPO/50V | | [EA] | | 1 |
| C 158 | 106-04104-0047 | CH 100KX7R/50V | | [EA] | | 1 |
| CR 1 | 007-06184-0000 | DIO DUAL SWITCHING | | [EA] | 1 | 1 |
| CR 2 | 007-06180-0000 | DIO SW MMBD6050 | | [EA] | 1 | 1 |
| CR 3 | 007-06184-0000 | DIO DUAL SWITCHING | | [EA] | 1 | 1 |
| CR 4 | 007-06180-0000 | DIO SW MMBD6050 | | [EA] | 1 | 1 |
| CR 5 | 007-06180-0000 | DIO SW MMBD6050 | | [EA] | 1 | 1 |
| CR 6 | 007-06180-0000 | DIO SW MMBD6050 | | [EA] | 1 | 1 |
| CR 7 | 007-05037-0002 | """DIO, 2KV | """ | [EA] | 1 | 1 |
| CR 8 | 007-05037-0002 | """DIO, 2KV | """ | [EA] | 1 | 1 |
| CR 9 | 007-06180-0000 | DIO SW MMBD6050 | | [EA] | 1 | 1 |

| | | | | | |
|---|---|---|---|---|---|
| CR 10 | 007-06180-0000 | DIO SW MMBD6050 | [EA] | 1 | 1 |
| CR 11 | 007-06180-0000 | DIO SW MMBD6050 | [EA] | 1 | 1 |
| CR 12 | 007-06180-0000 | DIO SW MMBD6050 | [EA] | 1 | 1 |
| CR 13 | 007-06180-0000 | DIO SW MMBD6050 | [EA] | 1 | 1 |
| CR 14 | 007-06180-0000 | DIO SW MMBD6050 | [EA] | 1 | 1 |
| CR 15 | 007-06180-0000 | DIO SW MMBD6050 | [EA] | 1 | 1 |
| CR 16 | 007-06184-0000 | DIO DUAL SWITCHING | [EA] | 1 | 1 |
| CR 17 | 007-06180-0000 | DIO SW MMBD6050 | [EA] | 1 | 1 |
| CR 18 | 007-06180-0000 | DIO SW MMBD6050 | [EA] | 1 | 1 |
| CR 19 | 007-06180-0000 | DIO SW MMBD6050 | [EA] | 1 | 1 |
| CR 20 | 007-06184-0000 | DIO DUAL SWITCHING | [EA] | 1 | |
| CR 21 | 007-06452-0000 | """SCHOTTKY, DUAL, SE """ | [EA] | 1 | 1 |
| CR 22 | 007-06184-0000 | DIO DUAL SWITCHING | [EA] | 1 | 1 |
| CR 24 | 007-05117-0000 | DIO Z 3.3V SOT | [EA] | 1 | 1 |
| CR 25 | 007-06184-0000 | DIO DUAL SWITCHING | [EA] | 1 | 1 |
| CR 26 | 007-06180-0000 | DIO SW MMBD6050 | [EA] | 1 | |
| CR 26 | 007-06444-0002 | DIO 1A 150V SMD | [EA] | | 1 |
| CR 27 | 007-06180-0000 | DIO SW MMBD6050 | [EA] | | 1 |
| FL 1 | 017-00263-0000 | FLTR DIE BP 1030MH | [EA] | 1 | 1 |
| FL 2 | 017-00264-0000 | FLTR DIE BP 959MHZ | [EA] | 1 | 1 |
| ITM 1 | 009-09070-0000 | PCBD KT76A MAIN BD | [EA] | 1 | |
| ITM 1 | 009-09070-0020 | KT 76A PC BOARD | [EA] | | 1 |
| ITM 2 | 047-12008-0004 | IF FENCE ASSY | [EA] | 1 | 1 |
| ITM 3 | 047-12009-0002 | """IF COVER, PLATED """ | [EA] | 1 | 1 |
| ITM 4 | 200-09080-0000 | SWITCH BOARD | [EA] | 1 | |
| ITM 4 | 200-09080-0020 | SWITCH BOARD BOM | [EA] | | 1 |
| ITM 5 | 016-01040-0000 | COATING TYPE AR | [AR] | 1 | 1 |
| ITM 6 | 016-01082-0000 | DC RTV 3145 | [AR] | 1 | 1 |
| ITM 7 | 033-00224-0000 | SKT PLCC SM 20 PIN | [EA] | 1 | 1 |
| J 2 | 030-02185-0016 | RGT ANG HDR 26P | [EA] | 1 | 1 |
| J 3 | 030-02453-0002 | CONNECTOR 4P | [EA] | 1 | 1 |
| J 4 | 008-00048-0000 | SLDRLS PIN & RECPT | [EA] | 1 | 1 |
| L 1 | 019-02752-2330 | IND SM 33UH 15% | [EA] | 1 | 1 |
| L 2 | 013-00172-0001 | FERR BEAD SRFC MT | [EA] | | 1 |
| L 2 | 013-00186-0000 | FERR CHOKE Z-MAX | [EA] | 1 | |
| L 3 | 019-02660-0073 | IND SM 470 NH 5% | [EA] | 1 | 1 |
| L 4 | 019-02660-0071 | IND SM 150 5% | [EA] | 1 | 1 |
| L 5 | 019-02660-0062 | IND SM 15 5% | [EA] | 1 | 1 |
| L 6 | 019-02660-0062 | IND SM 15 5% | [EA] | 1 | 1 |
| L 7 | 019-02660-0056 | IND SM 56 2% | [EA] | 1 | 1 |
| L 8 | 019-02660-0056 | IND SM 56 2% | [EA] | 1 | 1 |
| L 9 | 019-02660-0072 | IND SM 680 NH 5% | [EA] | 1 | 1 |
| L 10 | 019-02660-0072 | IND SM 680 NH 5% | [EA] | 1 | 1 |
| L 11 | 019-02660-0072 | IND SM 680 NH 5% | [EA] | 1 | 1 |

| | | | | | |
|---|---|---|---|---|---|
| L 12 | 019-02660-0035 | IND SM 3900 10% | [EA] | 1 | 1 |
| L 13 | 019-02660-0072 | IND SM 680 NH 5% | [EA] | 1 | 1 |
| L 14 | 019-02660-0056 | IND SM 56 2% | [EA] | 1 | 1 |
| L 15 | 019-02660-0073 | IND SM 470 NH 5% | [EA] | 1 | 1 |
| Q 1 | 007-01041-0000 | HEXFET IRLL014 NCH | [EA] | 1 | |
| Q 2 | 007-01051-0001 | P CHANNEL MOSFET | [EA] | 1 | 1 |
| Q 3 | 007-01041-0000 | HEXFET IRLL014 NCH | [EA] | 1 | |
| Q 4 | 007-00539-0000 | XSTR MMBTH10 | [EA] | 1 | 1 |
| Q 5 | 007-00383-0004 | SOT-23 2N2222A XST | [EA] | 1 | |
| Q 6 | 007-00903-0000 | 2N7002 MOSFET | [EA] | 1 | 1 |
| Q 7 | 007-01042-0000 | XSTR PNP MMBT3640 | [EA] | 1 | |
| Q 8 | 007-00539-0000 | XSTR MMBTH10 | [EA] | 1 | |
| Q 9 | 007-01018-0000 | MOS FET LOGIC N-CH | [EA] | 1 | 1 |
| Q 10 | 007-01042-0000 | XSTR PNP MMBT3640 | [EA] | 1 | 1 |
| Q 11 | 007-00383-0004 | SOT-23 2N2222A XST | [EA] | 1 | 1 |
| Q 12 | 007-00383-0004 | SOT-23 2N2222A XST | [EA] | 1 | 1 |
| Q 13 | 007-00383-0004 | SOT-23 2N2222A XST | [EA] | 1 | 1 |
| Q 14 | 007-00383-0004 | SOT-23 2N2222A XST | [EA] | 1 | 1 |
| Q 15 | 007-00383-0004 | SOT-23 2N2222A XST | [EA] | 1 | 1 |
| Q 16 | 007-00539-0000 | XSTR MMBTH10 | [EA] | 1 | 1 |
| Q 17 | 007-00383-0004 | SOT-23 2N2222A XST | [EA] | 1 | 1 |
| Q 18 | 007-01042-0000 | XSTR PNP MMBT3640 | [EA] | 1 | 1 |
| Q 19 | 007-00539-0000 | XSTR MMBTH10 | [EA] | 1 | 1 |
| Q 20 | 007-00539-0000 | XSTR MMBTH10 | [EA] | 1 | 1 |
| Q 21 | 007-00539-0000 | XSTR MMBTH10 | [EA] | 1 | 1 |
| Q 22 | 007-00539-0000 | XSTR MMBTH10 | [EA] | 1 | 1 |
| Q 23 | 007-00383-0004 | SOT-23 2N2222A XST | [EA] | | 1 |
| Q 24 | 007-00903-0000 | 2N7002 MOSFET | [EA] | | 1 |
| Q 25 | 007-01078-0001 | DUAL N-CHANNEL 30V MOS | [EA] | | 1 |
| Q 27 | 007-00903-0000 | 2N7002 MOSFET | [EA] | | 1 |
| R 1 | 139-00100-0010 | RES CH 10 OHMS 1% TW | [EA] | 1 | 1 |
| R 2 | 139-01002-0010 | RES CH 10K TW 1% | [EA] | 1 | 1 |
| R 3 | 139-01002-0010 | RES CH 10K TW 1% | [EA] | 1 | 1 |
| R 4 | 139-01002-0010 | RES CH 10K TW 1% | [EA] | 1 | 1 |
| R 5 | 139-04752-0010 | RES CH 47.5K TW 1% | [EA] | 1 | 1 |
| R 6 | 139-01003-0010 | RES CH 100K TW 1% | [EA] | 1 | 1 |
| R 7 | 139-02002-0010 | RES CH 20K TW 1% | [EA] | 1 | 1 |
| R 8 | 139-02002-0010 | RES CH 20K TW 1% | [EA] | 1 | 1 |
| R 9 | 139-01003-0010 | RES CH 100K TW 1% | [EA] | 1 | 1 |
| R 10 | 139-02001-0010 | RES CH 2.00K TW 1% | [EA] | 1 | 1 |
| R 11 | 139-03011-0010 | RES CH 3.01K .1W 1% | [EA] | 1 | |
| R 12 | 139-04752-0010 | RES CH 47.5K TW 1% | [EA] | 1 | |
| R 14 | 139-02430-0010 | RES CH 243 TW 1% | [EA] | 1 | 1 |
| R 15 | 139-01002-0010 | RES CH 10K TW 1% | [EA] | 1 | 1 |

| | | | | | |
|---|---|---|---|---|---|
| R 16 | 139-00200-0010 | RES CH 20.0 .1W 1% | [EA] | 1 | 1 |
| R 17 | 139-01003-0010 | RES CH 100K TW 1% | [EA] | 1 | 1 |
| R 18 | 139-01003-0010 | RES CH 100K TW 1% | [EA] | 1 | 1 |
| R 19 | 139-02000-0010 | RES CH 200 OHMS 1% TW | [EA] | 1 | |
| R 19 | 139-02430-0010 | RES CH 243 TW 1% | [EA] | | 1 |
| R 20 | 139-02001-0010 | RES CH 2.00K TW 1% | [EA] | | 1 |
| R 20 | 139-03921-0010 | RES CH 3.92K TW 1% | [EA] | 1 | |
| R 22 | 139-00200-0010 | RES CH 20.0 .1W 1% | [EA] | 1 | 1 |
| R 23 | 139-00200-0010 | RES CH 20.0 .1W 1% | [EA] | 1 | |
| R 24 | 139-00511-0010 | RES CH 51.1 .1W 1% | [EA] | 1 | 1 |
| R 25 | 139-01003-0010 | RES CH 100K TW 1% | [EA] | 1 | 1 |
| R 26 | 139-01003-0010 | RES CH 100K TW 1% | [EA] | 1 | 1 |
| R 27 | 139-01001-0010 | RES CH 1000 .1W 1% | [EA] | | 1 |
| R 27 | 139-02001-0010 | RES CH 2.00K TW 1% | [EA] | 1 | |
| R 28 | 139-01001-0010 | RES CH 1000 .1W 1% | [EA] | | 1 |
| R 28 | 139-02001-0010 | RES CH 2.00K TW 1% | [EA] | 1 | |
| R 29 | 139-01002-0010 | RES CH 10K TW 1% | [EA] | 1 | 1 |
| R 30 | 139-01003-0010 | RES CH 100K TW 1% | [EA] | 1 | 1 |
| R 31 | 139-03921-0010 | RES CH 3.92K TW 1% | [EA] | 1 | |
| R 32 | 139-02001-0010 | RES CH 2.00K TW 1% | [EA] | 1 | 1 |
| R 34 | 139-04752-0010 | RES CH 47.5K TW 1% | [EA] | 1 | 1 |
| R 35 | 139-02002-0010 | RES CH 20K TW 1% | [EA] | 1 | 1 |
| R 36 | 139-04752-0010 | RES CH 47.5K TW 1% | [EA] | 1 | 1 |
| R 37 | 139-04752-0010 | RES CH 47.5K TW 1% | [EA] | 1 | 1 |
| R 38 | 139-04021-0000 | RES CH 4.02K EW 1% | [EA] | 1 | 1 |
| R 39 | 139-04021-0000 | RES CH 4.02K EW 1% | [EA] | 1 | 1 |
| R 40 | 139-00200-0010 | RES CH 20.0 .1W 1% | [EA] | | 1 |
| R 40 | 139-01000-0010 | RES CH 100 .1W 1% | [EA] | 1 | |
| R 42 | 139-01001-0010 | RES CH 1000 .1W 1% | [EA] | 1 | |
| R 43 | 139-02001-0010 | RES CH 2.00K TW 1% | [EA] | 1 | |
| R 44 | 139-02430-0010 | RES CH 243 TW 1% | [EA] | 1 | 1 |
| R 45 | 139-07500-0010 | RES CH 750 OHMS 1% TW | [EA] | 1 | 1 |
| R 46 | 139-02002-0010 | RES CH 20K TW 1% | [EA] | 1 | 1 |
| R 47 | 139-04752-0010 | RES CH 47.5K TW 1% | [EA] | 1 | 1 |
| R 48 | 139-04021-0000 | RES CH 4.02K EW 1% | [EA] | 1 | 1 |
| R 49 | 139-04021-0000 | RES CH 4.02K EW 1% | [EA] | 1 | 1 |
| R 50 | 139-00000-0014 | CKT JUMPER 0805 | [EA] | | 0.9 |
| R 50 | 139-01004-0010 | RES CH 1M TW 1% | [EA] | | 0.1 |
| R 51 | 139-00000-0014 | CKT JUMPER 0805 | [EA] | 0.9 | |
| R 51 | 139-01004-0010 | RES CH 1M TW 1% | [EA] | 0.1 | |
| R 52 | 139-01002-0010 | RES CH 10K TW 1% | [EA] | 1 | 1 |
| R 53 | 139-00000-0014 | CKT JUMPER 0805 | [EA] | 0.1 | 0.1 |
| R 53 | 139-01004-0010 | RES CH 1M TW 1% | [EA] | 0.9 | 0.9 |
| R 54 | 139-02002-0010 | RES CH 20K TW 1% | [EA] | 1 | 1 |

| | | | | | |
|---|---|---|---|---|---|
| R 55 | 139-04752-0010 | RES CH 47.5K TW 1% | [EA] | 1 | 1 |
| R 56 | 139-04752-0010 | RES CH 47.5K TW 1% | [EA] | 1 | 1 |
| R 57 | 139-04752-0010 | RES CH 47.5K TW 1% | [EA] | 1 | 1 |
| R 58 | 139-04021-0000 | RES CH 4.02K EW 1% | [EA] | 1 | 1 |
| R 59 | 139-04021-0000 | RES CH 4.02K EW 1% | [EA] | 1 | 1 |
| R 60 | 139-02002-0010 | RES CH 20K TW 1% | [EA] | 1 | 1 |
| R 61 | 139-02002-0010 | RES CH 20K TW 1% | [EA] | 1 | 1 |
| R 62 | 139-02001-0010 | RES CH 2.00K TW 1% | [EA] | 1 | 1 |
| R 63 | 139-00200-0010 | RES CH 20.0 .1W 1% | [EA] | 1 | 1 |
| R 64 | 139-04752-0010 | RES CH 47.5K TW 1% | [EA] | 1 | 1 |
| R 65 | 139-04752-0010 | RES CH 47.5K TW 1% | [EA] | 1 | 1 |
| R 66 | 139-01001-0010 | RES CH 1000 .1W 1% | [EA] | 1 | |
| R 67 | 139-04750-0010 | RES CH 475 .1W 1% | [EA] | 1 | |
| R 68 | 139-07503-0000 | RES CHIP 750KEW1% | [EA] | 1 | 1 |
| R 69 | 139-07503-0000 | RES CHIP 750KEW1% | [EA] | 1 | 1 |
| R 70 | 139-07503-0000 | RES CHIP 750KEW1% | [EA] | 1 | 1 |
| R 71 | 139-07503-0000 | RES CHIP 750KEW1% | [EA] | 1 | 1 |
| R 72 | 139-07503-0000 | RES CHIP 750KEW1% | [EA] | 1 | 1 |
| R 73 | 139-07503-0000 | RES CHIP 750KEW1% | [EA] | 1 | 1 |
| R 74 | 139-07503-0000 | RES CHIP 750KEW1% | [EA] | 1 | 1 |
| R 75 | 139-07503-0000 | RES CHIP 750KEW1% | [EA] | 1 | 1 |
| R 76 | 139-04752-0010 | RES CH 47.5K TW 1% | [EA] | 1 | 1 |
| R 77 | 139-04752-0010 | RES CH 47.5K TW 1% | [EA] | 1 | 1 |
| R 78 | 139-04021-0000 | RES CH 4.02K EW 1% | [EA] | 1 | 1 |
| R 79 | 139-04021-0000 | RES CH 4.02K EW 1% | [EA] | 1 | 1 |
| R 80 | 139-01002-0010 | RES CH 10K TW 1% | [EA] | 1 | 1 |
| R 81 | 139-02430-0010 | RES CH 243 TW 1% | [EA] | 1 | |
| R 82 | 139-01000-0010 | RES CH 100 .1W 1% | [EA] | 1 | 1 |
| R 83 | 139-02430-0010 | RES CH 243 TW 1% | [EA] | 1 | 1 |
| R 84 | 139-02000-0010 | RES CH 200 OHMS 1% TW | [EA] | 1 | |
| R 84 | 139-02001-0010 | RES CH 2.00K TW 1% | [EA] | | 1 |
| R 85 | 139-04750-0010 | RES CH 475 .1W 1% | [EA] | 1 | |
| R 86 | 139-01000-0010 | RES CH 100 .1W 1% | [EA] | 1 | 1 |
| R 87 | 139-04752-0010 | RES CH 47.5K TW 1% | [EA] | 1 | 1 |
| R 88 | 139-04752-0010 | RES CH 47.5K TW 1% | [EA] | 1 | 1 |
| R 89 | 139-04752-0010 | RES CH 47.5K TW 1% | [EA] | 1 | 1 |
| R 90 | 139-02491-0010 | RES CH 2.49K TW 1% | [EA] | | 1 |
| R 90 | 139-03011-0010 | RES CH 3.01K .1W 1% | [EA] | 1 | |
| R 91 | 139-02002-0010 | RES CH 20K TW 1% | [EA] | 1 | 1 |
| R 92 | 139-04752-0010 | RES CH 47.5K TW 1% | [EA] | 1 | 1 |
| R 93 | 139-04021-0000 | RES CH 4.02K EW 1% | [EA] | 1 | 1 |
| R 94 | 139-04021-0000 | RES CH 4.02K EW 1% | [EA] | 1 | 1 |
| R 95 | 139-07501-0010 | RES CH 7.5K .1W 1% | [EA] | 1 | 1 |
| R 96 | 139-07501-0010 | RES CH 7.5K .1W 1% | [EA] | 1 | 1 |

| | | | | | |
|---|---|---|---|---|---|
| R 97 | 139-03011-0010 | RES CH 3.01K .1W 1% | [EA] | 1 | 1 |
| R 98 | 139-02002-0010 | RES CH 20K TW 1% | [EA] | 1 | 1 |
| R 99 | 139-02001-0010 | RES CH 2.00K TW 1% | [EA] | 1 | 1 |
| R 100 | 139-04750-0010 | RES CH 475 .1W 1% | [EA] | 1 | |
| R 101 | 139-01001-0010 | RES CH 1000 .1W 1% | [EA] | 1 | |
| R 102 | 139-02002-0010 | RES CH 20K TW 1% | [EA] | 1 | |
| R 103 | 139-02001-0010 | RES CH 2.00K TW 1% | [EA] | 1 | |
| R 104 | 139-02432-0010 | RES CH 24300 .1W 1% | [EA] | 1 | |
| R 105 | 139-07501-0010 | RES CH 7.5K .1W 1% | [EA] | 1 | 1 |
| R 106 | 139-02002-0010 | RES CH 20K TW 1% | [EA] | 1 | 1 |
| R 107 | 139-02002-0010 | RES CH 20K TW 1% | [EA] | 1 | 1 |
| R 108 | 139-02002-0010 | RES CH 20K TW 1% | [EA] | 1 | 1 |
| R 109 | 139-02002-0010 | RES CH 20K TW 1% | [EA] | 1 | 1 |
| R 110 | 139-02002-0010 | RES CH 20K TW 1% | [EA] | 1 | 1 |
| R 111 | 139-04752-0010 | RES CH 47.5K TW 1% | [EA] | 1 | 1 |
| R 112 | 139-04752-0010 | RES CH 47.5K TW 1% | [EA] | 1 | 1 |
| R 113 | 139-04021-0000 | RES CH 4.02K EW 1% | [EA] | 1 | 1 |
| R 114 | 139-04021-0000 | RES CH 4.02K EW 1% | [EA] | 1 | 1 |
| R 115 | 139-02002-0010 | RES CH 20K TW 1% | [EA] | 1 | 1 |
| R 116 | 139-01001-0010 | RES CH 1000 .1W 1% | [EA] | 1 | 1 |
| R 117 | 139-00511-0010 | RES CH 51.1 .1W 1% | [EA] | 1 | 1 |
| R 118 | 139-01001-0010 | RES CH 1000 .1W 1% | [EA] | 1 | 1 |
| R 119 | 139-01002-0010 | RES CH 10K TW 1% | [EA] | | 1 |
| R 119 | 139-07500-0010 | RES CH 750 OHMS 1% TW | [EA] | 1 | |
| R 120 | 139-01001-0010 | RES CH 1000 .1W 1% | [EA] | 1 | 1 |
| R 121 | 139-02001-0010 | RES CH 2.00K TW 1% | [EA] | | 1 |
| R 121 | 139-02430-0010 | RES CH 243 TW 1% | [EA] | 1 | |
| R 122 | 139-00909-0000 | RES CH 90.9 EW 1% | [EA] | 1 | 1 |
| R 123 | 139-00909-0000 | RES CH 90.9 EW 1% | [EA] | 1 | 1 |
| R 124 | 139-03921-0010 | RES CH 3.92K TW 1% | [EA] | 1 | 1 |
| R 125 | 139-01001-0010 | RES CH 1000 .1W 1% | [EA] | 1 | 1 |
| R 126 | 139-01002-0010 | RES CH 10K TW 1% | [EA] | 1 | 1 |
| R 128 | 139-03011-0010 | RES CH 3.01K .1W 1% | [EA] | 1 | 1 |
| R 129 | 139-01000-0010 | RES CH 100 .1W 1% | [EA] | 1 | |
| R 130 | 139-00681-0010 | RES CH 68.1 OHMS 1% TW | [EA] | 1 | 1 |
| R 131 | 139-00100-0010 | RES CH 10 OHMS 1% TW | [EA] | 1 | 1 |
| R 132 | 133-00560-0005 | RES VA SMD 500 QW | [EA] | 1 | 1 |
| R 133 | 139-04752-0010 | RES CH 47.5K TW 1% | [EA] | 1 | 1 |
| R 134 | 139-01001-0010 | RES CH 1000 .1W 1% | [EA] | 1 | 1 |
| R 135 | 139-01001-0010 | RES CH 1000 .1W 1% | [EA] | 1 | 1 |
| R 136 | 139-00511-0010 | RES CH 51.1 .1W 1% | [EA] | 1 | 1 |
| R 137 | 139-01002-0010 | RES CH 10K TW 1% | [EA] | 1 | 1 |
| R 138 | 139-01002-0010 | RES CH 10K TW 1% | [EA] | 1 | 1 |
| R 139 | 139-01002-0010 | RES CH 10K TW 1% | [EA] | 1 | 1 |

| | | | | | |
|---|---|---|---|---|---|
| R 140 | 139-04752-0010 | RES CH 47.5K TW 1% | [EA] | 1 | 1 |
| R 141 | 139-01002-0010 | RES CH 10K TW 1% | [EA] | 1 | 1 |
| R 143 | 139-04750-0010 | RES CH 475 .1W 1% | [EA] | 1 | 1 |
| R 144 | 139-00100-0010 | RES CH 10 OHMS 1% TW | [EA] | 1 | 1 |
| R 145 | 139-04752-0010 | RES CH 47.5K TW 1% | [EA] | 1 | 1 |
| R 146 | 139-03011-0010 | RES CH 3.01K .1W 1% | [EA] | 1 | |
| R 147 | 139-02002-0010 | RES CH 20K TW 1% | [EA] | 1 | |
| R 147 | 139-03011-0010 | RES CH 3.01K .1W 1% | [EA] | | 1 |
| R 148 | 139-03011-0010 | RES CH 3.01K .1W 1% | [EA] | 1 | 1 |
| R 149 | 139-02430-0010 | RES CH 243 TW 1% | [EA] | 1 | 1 |
| R 150 | 139-03572-0010 | RES CH 35700 .1W 1% | [EA] | 1 | 1 |
| R 151 | 139-02001-0010 | RES CH 2.00K TW 1% | [EA] | 1 | 1 |
| R 152 | 139-00681-0010 | RES CH 68.1 OHMS 1% TW | [EA] | 1 | 1 |
| R 153 | 139-04750-0010 | RES CH 475 .1W 1% | [EA] | 1 | 1 |
| R 154 | 139-03011-0010 | RES CH 3.01K .1W 1% | [EA] | 1 | 1 |
| R 155 | 139-01002-0010 | RES CH 10K TW 1% | [EA] | 1 | 1 |
| R 156 | 139-04752-0010 | RES CH 47.5K TW 1% | [EA] | 1 | 1 |
| R 157 | 139-01000-0010 | RES CH 100 .1W 1% | [EA] | 1 | 1 |
| R 158 | 139-02001-0010 | RES CH 2.00K TW 1% | [EA] | 1 | 1 |
| R 159 | 139-02001-0010 | RES CH 2.00K TW 1% | [EA] | 1 | 1 |
| R 160 | 139-03011-0010 | RES CH 3.01K .1W 1% | [EA] | 1 | 1 |
| R 161 | 139-02001-0010 | RES CH 2.00K TW 1% | [EA] | 1 | 1 |
| R 162 | 139-00681-0010 | RES CH 68.1 OHMS 1% TW | [EA] | 1 | 1 |
| R 163 | 139-00511-0010 | RES CH 51.1 .1W 1% | [EA] | 1 | 1 |
| R 164 | 139-01300-0010 | RES CH 130 .1W 1% | [EA] | 1 | 1 |
| R 165 | 133-00560-0004 | RES VA SMD 200 QW | [EA] | 1 | 1 |
| R 167 | 139-02001-0010 | RES CH 2.00K TW 1% | [EA] | 1 | 1 |
| R 168 | 139-02000-0010 | RES CH 200 OHMS 1% TW | [EA] | 1 | |
| R 171 | 139-00100-0010 | RES CH 10 OHMS 1% TW | [EA] | 1 | 1 |
| R 172 | 139-04750-0010 | RES CH 475 .1W 1% | [EA] | 1 | 1 |
| R 174 | 139-04750-0010 | RES CH 475 .1W 1% | [EA] | 1 | 1 |
| R 175 | 139-00200-0010 | RES CH 20.0 .1W 1% | [EA] | 1 | 1 |
| R 176 | 139-01300-0010 | RES CH 130 .1W 1% | [EA] | 1 | 1 |
| R 177 | 139-02001-0010 | RES CH 2.00K TW 1% | [EA] | 1 | 1 |
| R 178 | 139-01002-0010 | RES CH 10K TW 1% | [EA] | 1 | 1 |
| R 182 | 139-00681-0010 | RES CH 68.1 OHMS 1% TW | [EA] | 1 | 1 |
| R 183 | 139-04750-0010 | RES CH 475 .1W 1% | [EA] | 1 | 1 |
| R 184 | 139-00511-0010 | RES CH 51.1 .1W 1% | [EA] | 1 | 1 |
| R 185 | 139-03011-0010 | RES CH 3.01K .1W 1% | [EA] | 1 | 1 |
| R 186 | 139-02002-0010 | RES CH 20K TW 1% | [EA] | 1 | 1 |
| R 187 | 139-03010-0010 | RES CH 301 .1W 1% | [EA] | 1 | 1 |
| R 188 | 139-03011-0010 | RES CH 3.01K .1W 1% | [EA] | 1 | 1 |
| R 189 | 139-00100-0010 | RES CH 10 OHMS 1% TW | [EA] | 1 | 1 |
| R 190 | 139-04750-0010 | RES CH 475 .1W 1% | [EA] | 1 | 1 |

| | | | | | |
|---|---|---|---|---|---|
| R 191 | 139-01002-0010 | RES CH 10K TW 1% | [EA] | 1 | 1 |
| R 192 | 139-04750-0010 | RES CH 475 .1W 1% | [EA] | 1 | 1 |
| R 193 | 139-04750-0010 | RES CH 475 .1W 1% | [EA] | 1 | 1 |
| R 194 | 139-04750-0010 | RES CH 475 .1W 1% | [EA] | 1 | 1 |
| R 195 | 139-04750-0010 | RES CH 475 .1W 1% | [EA] | 1 | 1 |
| R 196 | 139-02430-0010 | RES CH 243 TW 1% | [EA] | 1 | 1 |
| R 197 | 139-02002-0010 | RES CH 20K TW 1% | [EA] | 1 | 1 |
| R 198 | 139-01001-0010 | RES CH 1000 .1W 1% | [EA] | 1 | 1 |
| R 199 | 139-01002-0010 | RES CH 10K TW 1% | [EA] | 1 | 1 |
| R 200 | 139-01001-0010 | RES CH 1000 .1W 1% | [EA] | 1 | 1 |
| R 201 | 139-00100-0010 | RES CH 10 OHMS 1% TW | [EA] | 1 | 1 |
| R 202 | 139-01001-0010 | RES CH 1000 .1W 1% | [EA] | 1 | 1 |
| R 203 | 139-04750-0010 | RES CH 475 .1W 1% | [EA] | 1 | 1 |
| R 204 | 139-00332-0010 | RES CH 33.2 OHM TW 1% | [EA] | 1 | 1 |
| R 205 | 139-02430-0010 | RES CH 243 TW 1% | [EA] | 1 | 1 |
| R 206 | 139-02430-0010 | RES CH 243 TW 1% | [EA] | 1 | 1 |
| R 207 | 139-02001-0010 | RES CH 2.00K TW 1% | [EA] | 1 | 1 |
| R 208 | 139-02430-0010 | RES CH 243 TW 1% | [EA] | 1 | 1 |
| R 209 | 139-02001-0010 | RES CH 2.00K TW 1% | [EA] | 1 | 1 |
| R 210 | 139-02430-0010 | RES CH 243 TW 1% | [EA] | 1 | 1 |
| R 211 | 139-02001-0010 | RES CH 2.00K TW 1% | [EA] | 1 | 1 |
| R 212 | 139-01000-0010 | RES CH 100 .1W 1% | [EA] | 1 | 1 |
| R 213 | 139-02001-0010 | RES CH 2.00K TW 1% | [EA] | 1 | 1 |
| R 214 | 139-01001-0010 | RES CH 1000 .1W 1% | [EA] | 1 | 1 |
| R 215 | 133-00560-0008 | RES VA SMD 5K QW | [EA] | 1 | 1 |
| R 216 | 139-02001-0010 | RES CH 2.00K TW 1% | [EA] | | 1 |
| R 217 | 139-01001-0010 | RES CH 1000 .1W 1% | [EA] | | 1 |
| R 218 | 139-01001-0010 | RES CH 1000 .1W 1% | [EA] | | 1 |
| R 219 | 139-01003-0010 | RES CH 100K TW 1% | [EA] | | 1 |
| R 220 | 133-00560-0006 | RES VA SMD 1K QW | [EA] | | 1 |
| R 221 | 139-01002-0010 | RES CH 10K TW 1% | [EA] | | 1 |
| R 222 | 139-01002-0010 | RES CH 10K TW 1% | [EA] | | 1 |
| R 223 | 139-01002-0010 | RES CH 10K TW 1% | [EA] | | 1 |
| R 224 | 139-01002-0010 | RES CH 10K TW 1% | [EA] | | 1 |
| R 225 | 139-01002-0010 | RES CH 10K TW 1% | [EA] | | 1 |
| R 226 | 139-01002-0010 | RES CH 10K TW 1% | [EA] | | 1 |
| R 227 | 139-01002-0010 | RES CH 10K TW 1% | [EA] | | 1 |
| R 228 | 139-01002-0010 | RES CH 10K TW 1% | [EA] | | 1 |
| R 229 | 139-01002-0010 | RES CH 10K TW 1% | [EA] | | 1 |
| R 230 | 139-01002-0010 | RES CH 10K TW 1% | [EA] | | 1 |
| R 231 | 139-01002-0010 | RES CH 10K TW 1% | [EA] | | 1 |
| R 232 | 139-01002-0010 | RES CH 10K TW 1% | [EA] | | 1 |
| R 233 | 139-07501-0010 | RES CH 7.5K .1W 1% | [EA] | | 1 |
| R 235 | 139-01002-0010 | RES CH 10K TW 1% | [EA] | | 1 |

| | | | | | |
|---|---|---|---|---|---|
| R 236 | 139-01002-0010 | RES CH 10K TW 1% | [EA] | | 1 |
| R 237 | 139-01003-0010 | RES CH 100K TW 1% | [EA] | | 1 |
| R 239 | 139-02001-0010 | RES CH 2.00K TW 1% | [EA] | | 1 |
| R 240 | 139-02002-0010 | RES CH 20K TW 1% | [EA] | | 1 |
| T 1 | 019-07275-0001 | HV TRANSFORMER | [EA] | 1 | 1 |
| TP 1 | 008-00309-0000 | TEST POINT SURF MNT | [EA] | 1 | 1 |
| TP 2 | 008-00309-0000 | TEST POINT SURF MNT | [EA] | 1 | 1 |
| TP 3 | 008-00309-0000 | TEST POINT SURF MNT | [EA] | 1 | 1 |
| TP 4 | 008-00309-0000 | TEST POINT SURF MNT | [EA] | 1 | 1 |
| TP 5 | 008-00309-0000 | TEST POINT SURF MNT | [EA] | 1 | 1 |
| U 1 | 124-00008-1003 | 74ACT08 SOIC | [EA] | 1 | |
| U 1 | 124-00011-0003 | IC 74HCT11 SO PKG | [EA] | | 1 |
| U 2 | 123-00074-0003 | IC 74HC74 SO PKG | [EA] | 1 | 1 |
| U 3 | 123-00003-0003 | IC 74HC03 SOIC | [EA] | 1 | 1 |
| U 4 | 120-03163-0001 | LM2901 SO-14 COMP | [EA] | 1 | |
| U 5 | 120-02555-0000 | EEPROM SER 64KX1 | [EA] | 1 | |
| U 5 | 122-30134-9999 | SEE 126-00138-XXXX FOR | [RF] | 0 | 0 |
| U 6 | 120-03115-0007 | LM317M DPAK | [EA] | 1 | 1 |
| U 7 | 120-03163-0001 | LM2901 SO-14 COMP | [EA] | 1 | 1 |
| U 8 | 120-03163-0001 | LM2901 SO-14 COMP | [EA] | 1 | 1 |
| U 9 | 120-02556-0000 | FPGA AT6002 | [EA] | 1 | 1 |
| U 10 | 120-03163-0001 | LM2901 SO-14 COMP | [EA] | 1 | 1 |
| U 11 | 120-03126-0005 | LM317L 50-8 | [EA] | 1 | |
| U 12 | 120-03163-0001 | LM2901 SO-14 COMP | [EA] | 1 | 1 |
| U 13 | 120-03053-0010 | IC LM2904 SO PKG | [EA] | 1 | |
| U 14 | 120-03177-0005 | """COMPARATOR, DUAL LM319""" | [EA] | 1 | 1 |
| U 15 | 123-00004-1003 | 74AC04 SO PKG | [EA] | 1 | 1 |
| U 16 | 123-04053-0003 | IC 74HC4053 SO | [EA] | 1 | |
| U 16 | 123-04053-0004 | """MUX, 2/CHAN ALOG """ | [EA] | | 1 |
| U 17 | 120-03053-0010 | IC LM2904 SO PKG | [EA] | 1 | 1 |
| U 18 | 120-03115-0000 | IC LM317T | [EA] | 1 | 1 |
| U 19 | 120-03644-0000 | MMIC 1GHZ LONO AMP | [EA] | 1 | 1 |
| U 20 | 120-03644-0000 | MMIC 1GHZ LONO AMP | [EA] | 1 | 1 |
| U 21 | 120-03526-0000 | IAM81008 | [EA] | 1 | 1 |
| U 22 | 120-03644-0000 | MMIC 1GHZ LONO AMP | [EA] | 1 | 1 |
| U 23 | 120-03115-0000 | IC LM317T | [EA] | 1 | 1 |
| U 24 | 120-03177-0005 | """COMPARATOR, DUAL LM319""" | [EA] | | 1 |
| U 26 | 120-03693-0001 | POWER MONITOR | [EA] | | 1 |
| Y 1 | 044-00344-0000 | XTAL SM 48MHZ | [EA] | 1 | 1 |
| REF 1 | 300-09070-0000 | MAIN BOARD | [RF] | X | |
| REF 1 | 300-09070-0020 | MAIN BOARD | [RF] | | X |
| REF 2 | 002-09070-0000 | MAIN BOARD | [RF] | X | |
| REF 2 | 002-09070-0020 | MAIN BOARD | [RF] | | X |

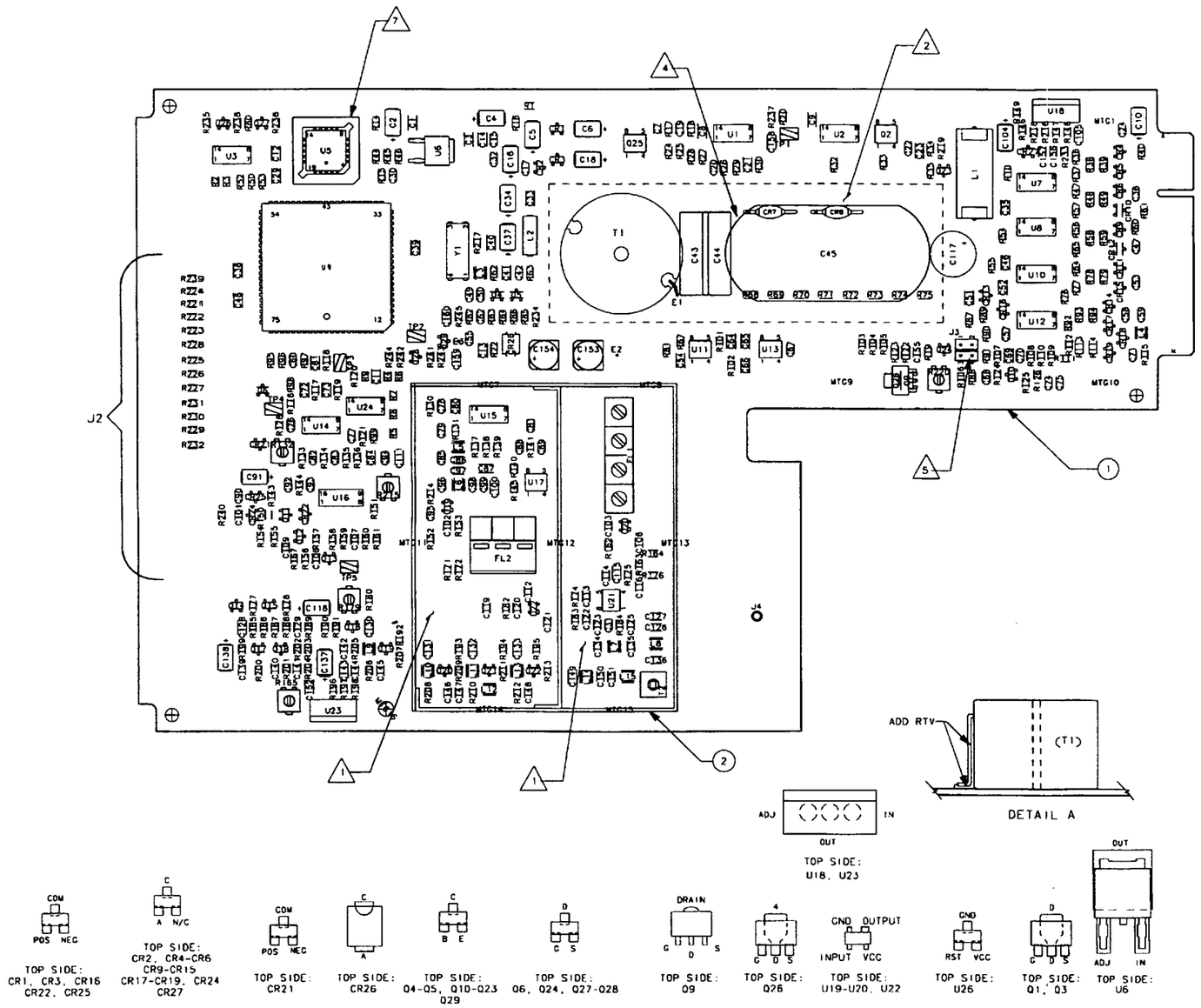


NOTES:

1. PRIOR TO POST COATING BOTH SIDES OF P.C. BOARD WITH ITEM 5, MASK OFF ALL MOUNTING AREAS ALL TESTPOINTS AND REFERENCE DESIGNATORS: U5, ITEM 7, R179, R165, R132, R215, R220, E1 THRU E3, J1 THRU J4, TP1 THRU TP5, AND ALL SURFACES WITHIN THE FENCED AREA INCLUDING THE OUTSIDE SURFACES OF THE FENCE (THE SEAM SOLDER SURFACE OF THE FENCE MAY BE COATED). THICKNESS .002"- .004".

2. THE FOLLOWING AREAS ARE TO RECEIVE .004"-.008" OF POST COAT (KPN 016-01040-0000): ALL SURFACES WITHIN HIGH VOLTAGE POWER SUPPLY AREA.

3. SWITCH BOARD ASSEMBLY (ITEM 4) TO BE COMPLETELY MASKED OR ASSEMBLED FOLLOWING POST COAT.

4. APPLY RTV (ITEM 6) TO HOLD C43, C44, C45, C117 TOGETHER AND TO FORM A .25" FILLET ON BOTH BOTTOM SIDES OF C45.

5. CLIP PIN 4 OF J3 FOR KEYING.

6. PRINTED CIRCUIT ASSEMBLY IDENTIFICATION MUST BE IN ACCORDANCE WITH SPEC. 001-01101-0000.

7. U5 WILL BE INSTALLED WITH SOCKET (ITEM 7).

**FIGURE 6-7 KT 76A/78A Main Board (S/N ≥ 120,800)**
**(Dwg. No. 300-09070-0020 R--)**
**(Sheet 1 of 3)**

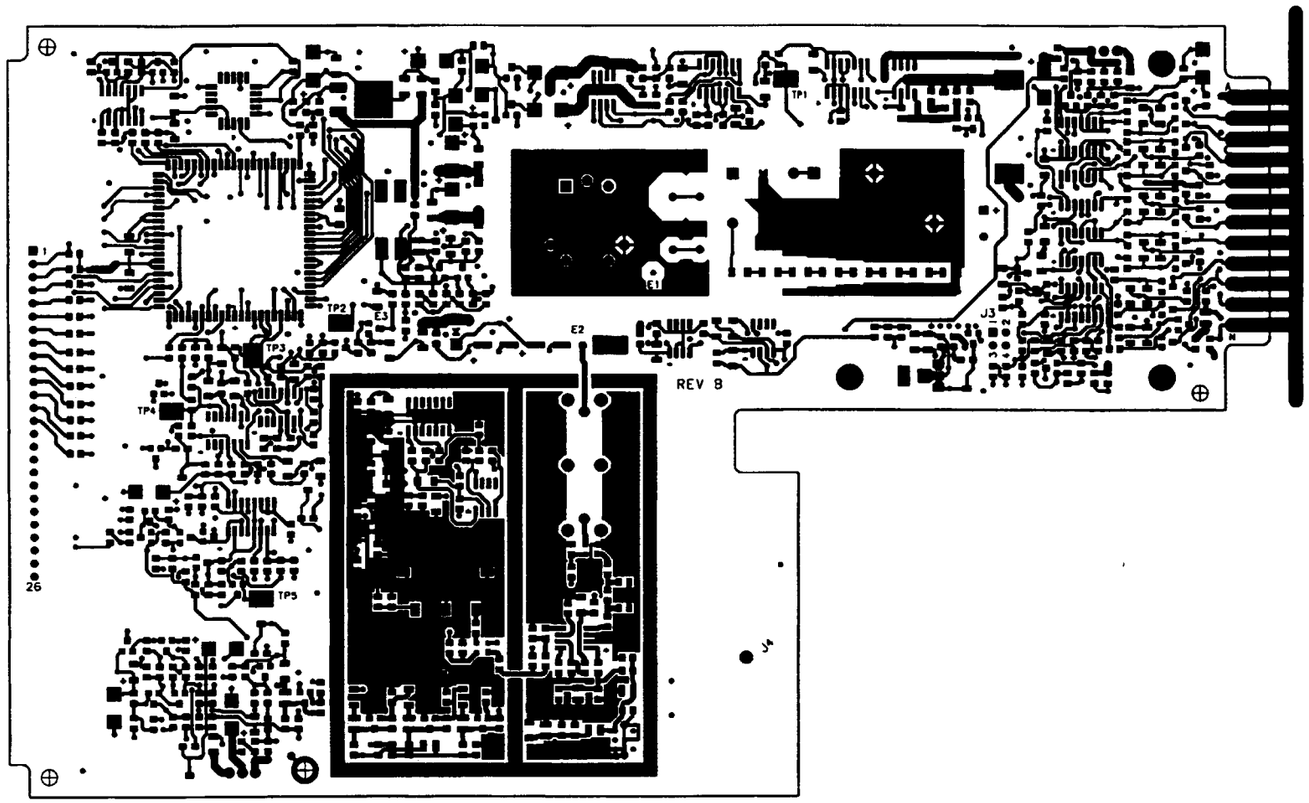


NEARSIDE VIEW OF PC BOARD

**FIGURE 6-7 KT 76A/78A Main Board (S/N ≥ 120,800)**
**(Dwg. No. 300-09070-0020 R--)**
**(Sheet 2 of 3)**

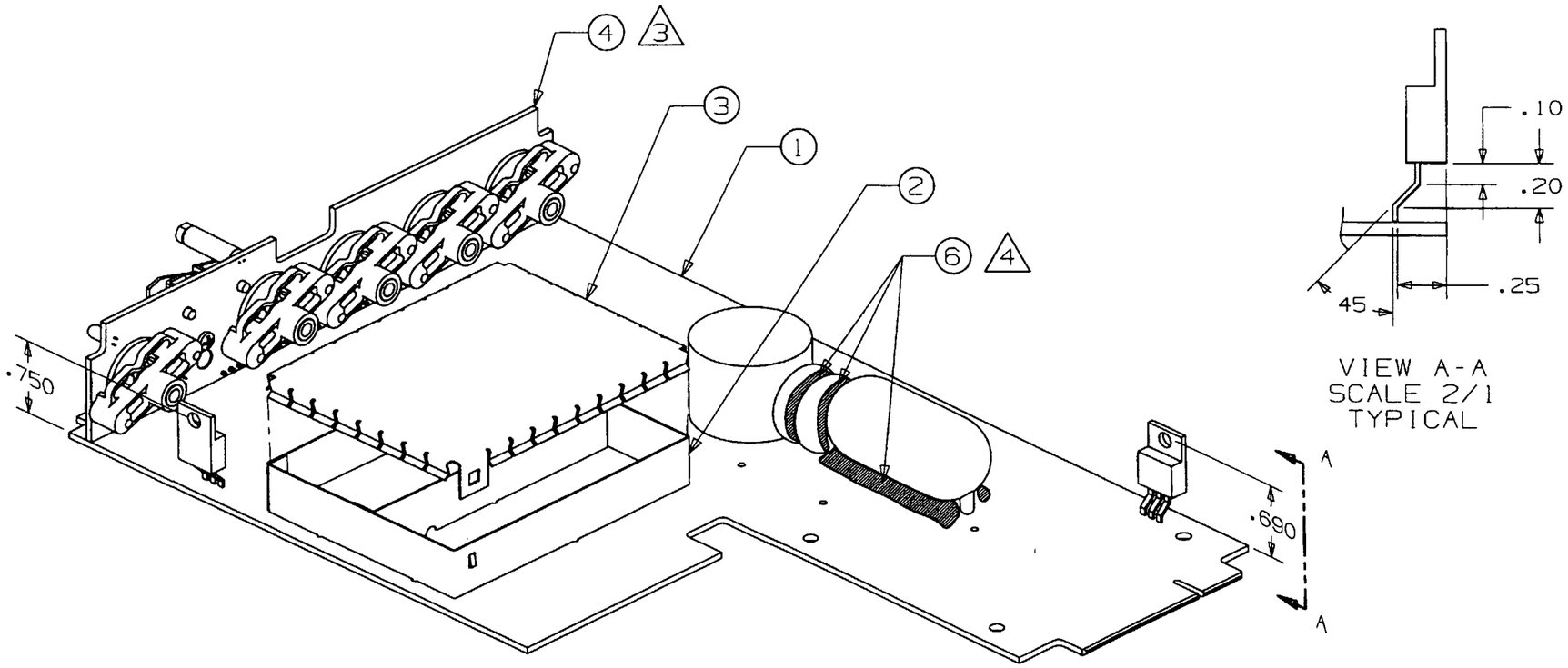


NOTE: MANY COMPONENTS NOT SHOWN. COMPONENTS SHOWN ARE FOR REFERENCE ONLY.

**FIGURE 6-7 KT 76A/78A Main Board (S/N ≥ 120,800)**
**(Dwg. No. 300-09070-0020 R--)**
**(Sheet 3 of 3)**

REWORK NOTE F. 1. REMOVE J2 PIN-19 FROM MAIN BOARD & P1 PIN-19 FROM SWITCH BOARD
2. RUN MAG WIRE FROM THE POSITIVE SIDE OF C33 ( AS DESIGNATED BY ARROW) TO THE CONNECTOR P1 PIN-19 ON SWITCH BOARD. TACPAC AS REQUIRED USE TACPAC 016-01144-0000 AND ACCELERATOR 016-01144-0001 AS NEEDED

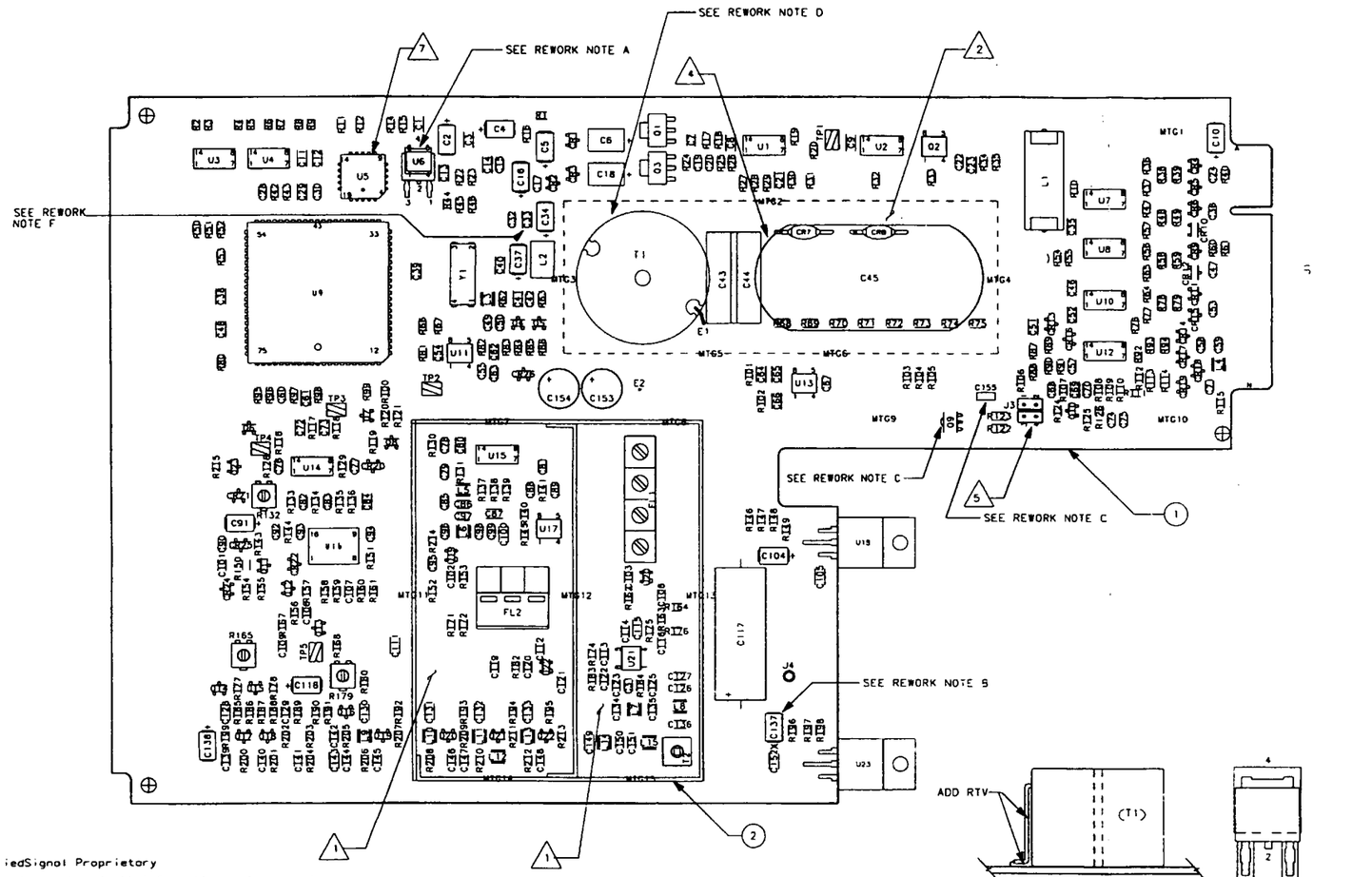


NOTES:

1. PRIOR TO POST COATING BOTH SIDES OF P.C. BOARD WITH ITEM 5, MASK OFF ALL MOUNTING AREAS ALL TESTPOINTS AND REFERENCE DESIGNATORS: U5, ITEM 7, R179, R165, R132, J4, J3, PLATED THROUGH HOLES FOR J2, J1, AND ALL SURFACES WITHIN THE FENCED AREA INCLUDING THE OUTSIDE SURFACES OF THE FENCE (THE SEAM SOLDER SURFACE OF THE FENCE MAY BE COATED). THICKNESS .002"- .004".

2. THE FOLLOWING AREAS ARE TO RECEIVE .004"-.008" OF POST COAT (KPN 016-01040-0000): ALL SURFACES WITHIN HIGH VOLTAGE POWER SUPPLY AREA.

3. SWITCH BOARD ASSEMBLY (ITEM 4) TO BE COMPLETELY MASKED OR ASSEMBLED FOLLOWING POST COAT.

4. APPLY RTV (ITEM 6) TO HOLD C43, C44, C45 TOGETHER AND TO FORM A .25" FILLET ON BOTH BOTTOM SIDES OF C45.

5. CLIP PIN 4 OF J3 FOR KEYING.

6. PRINTED CIRCUIT ASSEMBLY IDENTIFICATION MUST BE IN ACCORDANCE WITH SPEC. 001-01101-0000.

7. U5 WILL BE INSTALLED WITH SOCKET (ITEM 7).

REWORK NOTES:

A. TACPAC U6 WITH LEADS FACING UP TO MAIN BOARD USING TACPAC 016-01144-0000 AND ACCELERATOR 016-01144-0001 AS NEEDED.
ATTACH MAG WIRE FROM U6-1 TO R46 (END CLOSEST TO U6)
ATTACH MAG WIRE FROM U6-2 TO POSITIVE END OF C2.
ATTACH MAG WIRE FROM U6-3 TO CATHODE OF CR26.
CUT TRACE FROM U4-3 TO VIA. ATTACH MAG WIRE FROM U4-3 TO U6-3.
WITH MAG WIRE, CONNECT POSITIVE LEAD OF C153 TO U6-3 (REV. 0 BOARD ONLY).

B. INSTALL C137 WITH POSITIVE END CLOSEST TO C117. SCRAPE OFF POSITIVE SIGN INDICATOR ON PC BOARD.

C. CONNECT A MAGWIRE FROM ONE END OF C155 TO R123 (CONNECTED TO DRAIN OF Q9).
CONNECT ANOTHER MAGWIRE TO THE OTHER END OF C155 TO R105 (CONNECTED TO SOURCE OF Q9).
SECURE C155 TO PC. BOARD USING TAC PAC (016-01144-0000) & ACCELERATOR (016-01144-0001)
LOCATION OF C155 IS SHOWN ON 300 DRAWING.

D. ATTACH TRANSFORMER T1 AS PER DETAIL.
WIRE E1 IS TO BE ATTACHED TO TRANSFORMER BODY AND PCB WITH RTV (SEE DETAIL A).

E. 1. CHANGE R214 FROM 4.75K TO 1K
2. CUT GROUND PATH BETWEEN VIA AND R214.
3. CONNECT A MAGWIRE TO GROUND END OF R214 AND R215
4. TACPAC R215 TO PC BOARD. SEE DETAIL [C] ON PAGE 2.



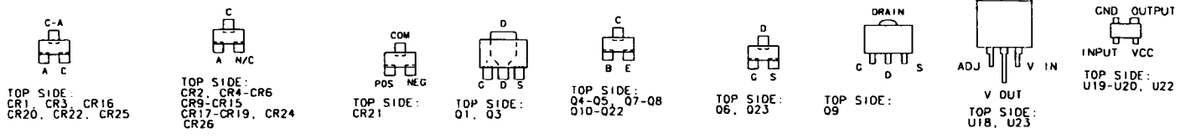


**FIGURE 6-8 KT 76A/78A Main Board (S/N ≥ 110,000)**
**(Dwg. No. 300-09070-0000 R-AA)**
**(Sheet 1 of 3)**

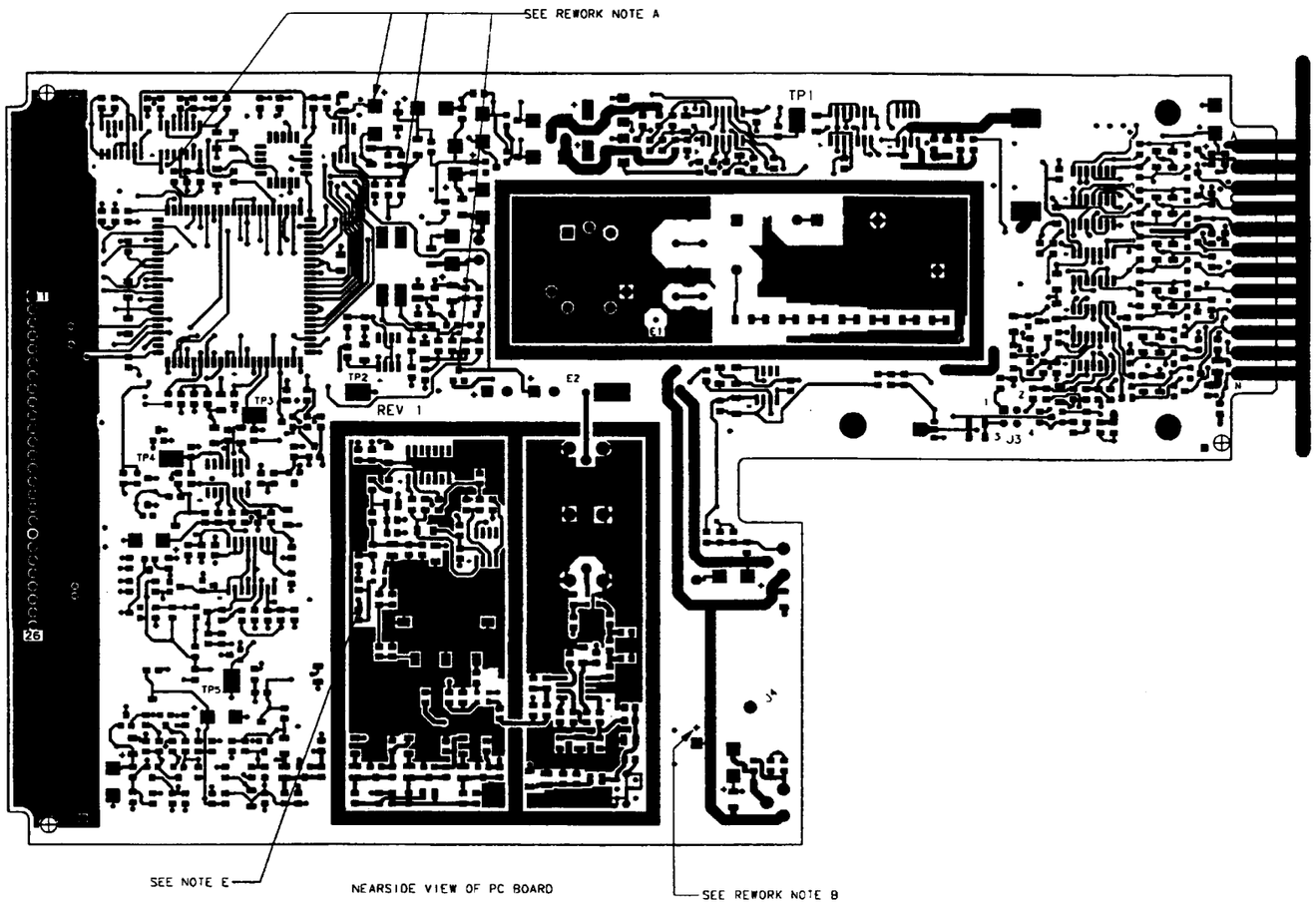


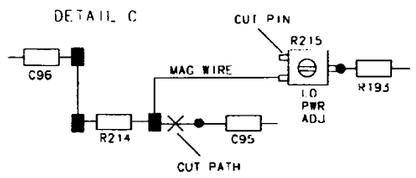


**FIGURE 6-8 KT 76A/78A Main Board (S/N ≥ 110,000)**
**(Dwg. No. 300-09070-0000 R-AA)**
**(Sheet 2 of 3)**

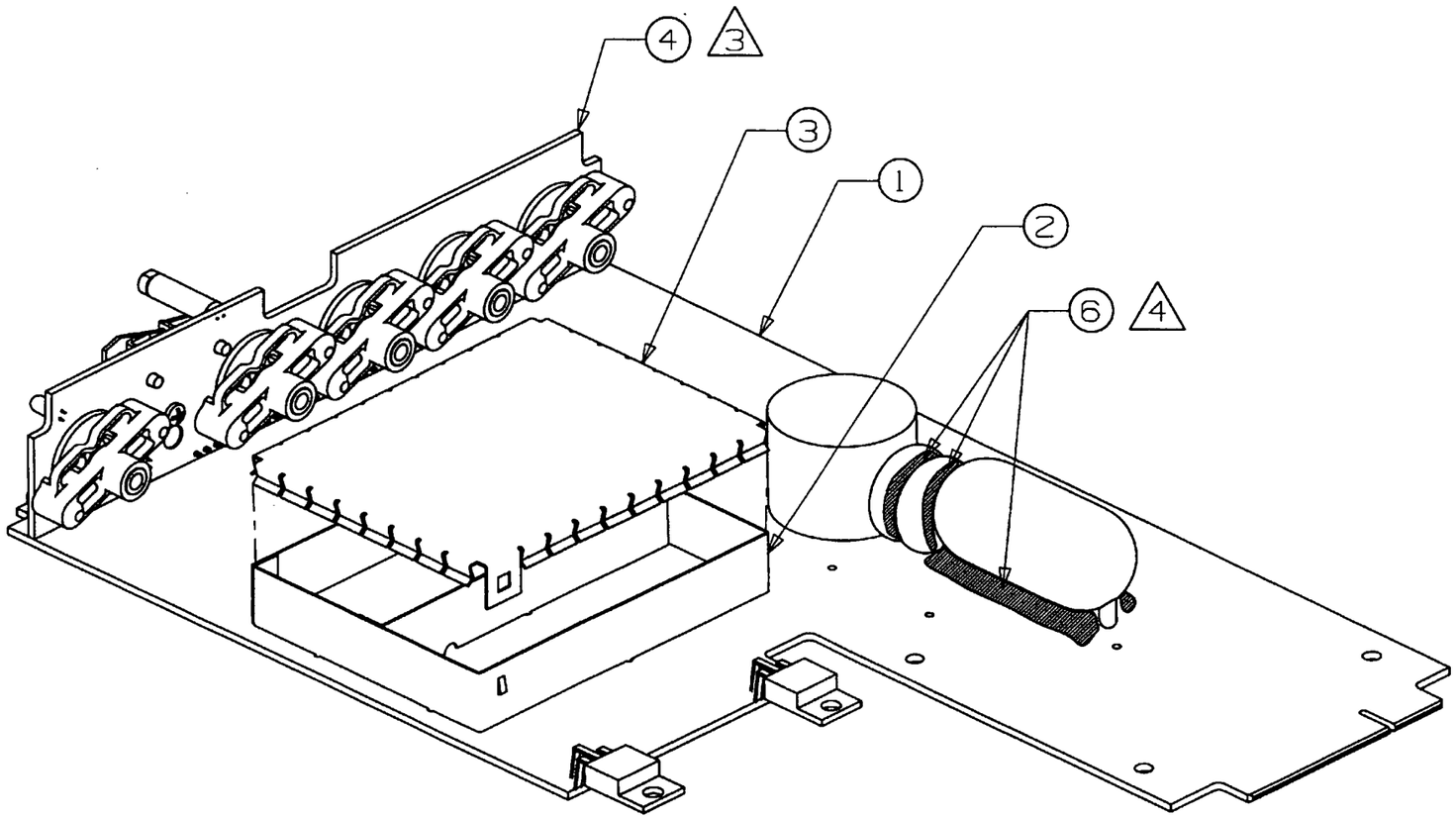


NOTE: MANY COMPONENTS NOT SHOWN. COMPONENTS SHOWN ARE FOR REFERENCE ONLY.

**FIGURE 6-8 KT 76A/78A Main Board (S/N ≥ 110,000)**
**(Dwg. No. 300-09070-0000 R-AA)**
**(Sheet 3 of 3)**

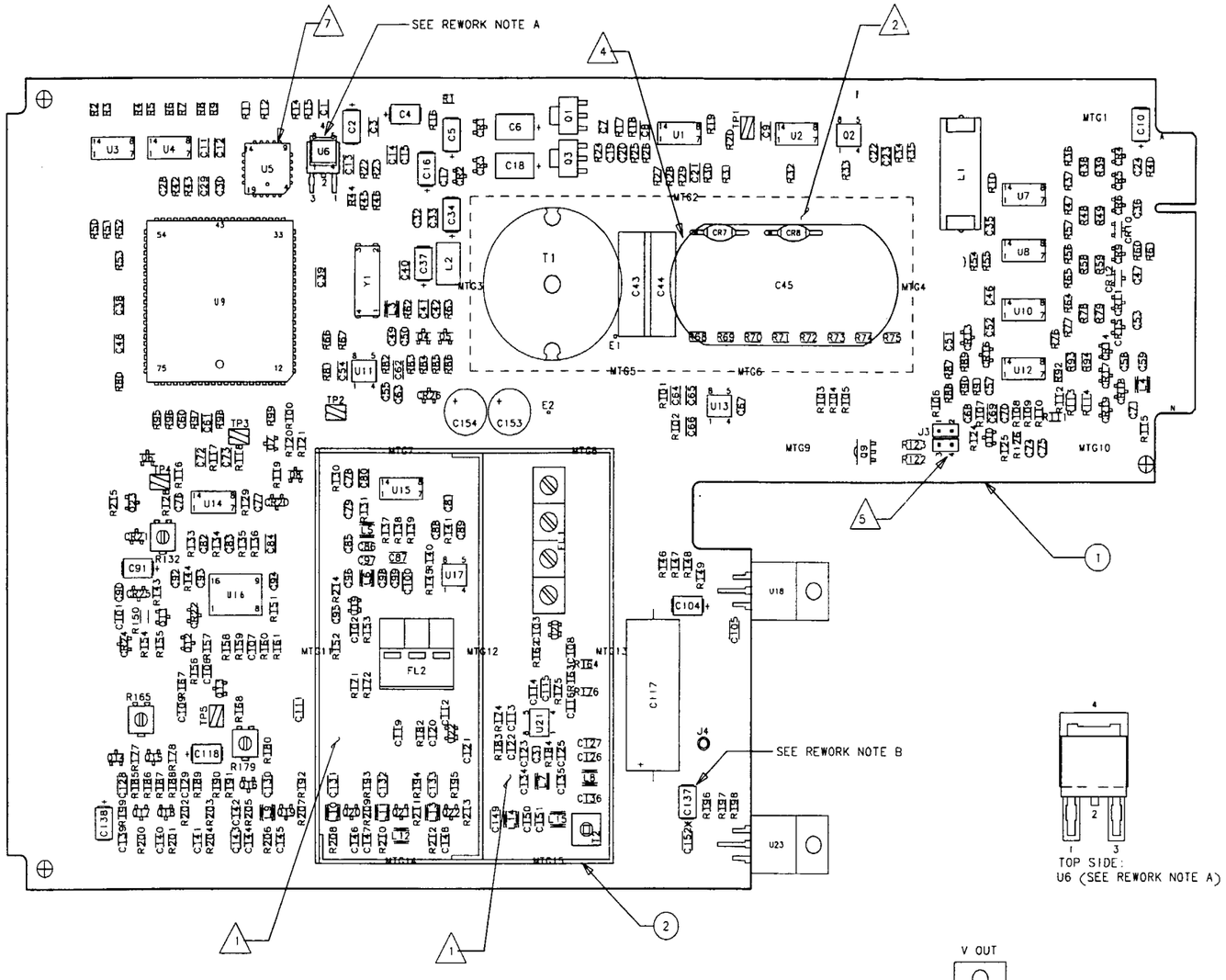


NOTES:

1. PRIOR TO POST COATING BOTH SIDES OF P.C. BOARD WITH ITEM 5, MASK OFF ALL MOUNTING AREAS ALL TESTPOINTS AND REFERENCE DESIGNATORS: U5, ITEM 7, R179, R165, R132, J4, J3, PLATED THROUGH HOLES FOR J2, J1, AND ALL SURFACES WITHIN THE FENCED AREA INCLUDING THE OUTSIDE SURFACES OF THE FENCE (THE SEAM SOLDER SURFACE OF THE FENCE MAY BE COATED). THICKNESS .002"- .004".

2. THE FOLLOWING AREAS ARE TO RECEIVE .004"-.008" OF POST COAT (KPN 016-01040-0000): ALL SURFACES WITHIN HIGH VOLTAGE POWER SUPPLY AREA.

3. SWITCH BOARD ASSEMBLY (ITEM 4) TO BE COMPLETELY MASKED OR ASSEMBLED FOLLOWING POST COAT.

4. APPLY RTV (ITEM 6) TO HOLD C43, C44, C45 TOGETHER AND TO FORM A .25" FILLET ON BOTH BOTTOM SIDES OF C45.

5. CLIP PIN 4 OF J3 FOR KEYING.

6. PRINTED CIRCUIT ASSEMBLY IDENTIFICATION MUST BE IN ACCORDANCE WITH SPEC. 001-01101-0000.

7. U5 WILL BE INSTALLED WITH SOCKET (ITEM 7).

REWORK NOTES:

A. TACPAC U6 WITH LEADS FACING UP TO MAIN BOARD USING TACPAC 016-01144-0000 AND ACCELERATOR 016-01144-0001 AS NEEDED.

ATTACH MAG WIRE FROM U6-1 TO R46 (END CLOSEST TO U6).

ATTACH MAG WIRE FROM U6-2 TO POSITIVE END OF C2.

ATTACH MAG WIRE FROM U6-3 TO CATHODE OF CR26.

CUT TRACE FROM U4-3 TO VIA. ATTACH MAG WIRE FROM U4-3 TO U6-3.

WITH MAG WIRE, CONNECT POSITIVE LEAD OF C153 TO U6-3 (REV. 0 BOARD ONLY).

B. INSTALL C137 WITH POSITIVE END CLOSEST TO C117. SCRAPE OFF POSITIVE SIGN INDICATOR ON PC BOARD.

THIS DRAWING IS NOT COMPLETE WITHOUT PARTS LIST 200-09070-0000
SOME PARTS SHOWN MAY NOT BE INSTALLED

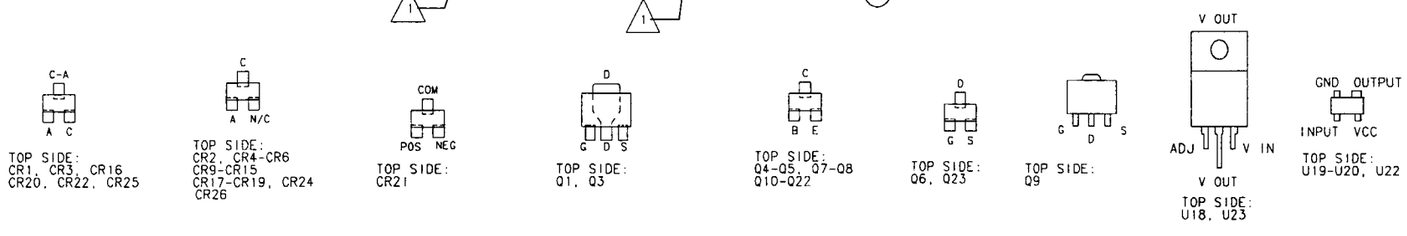


300090700000R7S1

**FIGURE 6-8A KT 76A/78A Main Board (S/N ≥ 110,000)**
**(Dwg. No. 300-09070-0000 R-7)**
**(Sheet 1 of 3)**

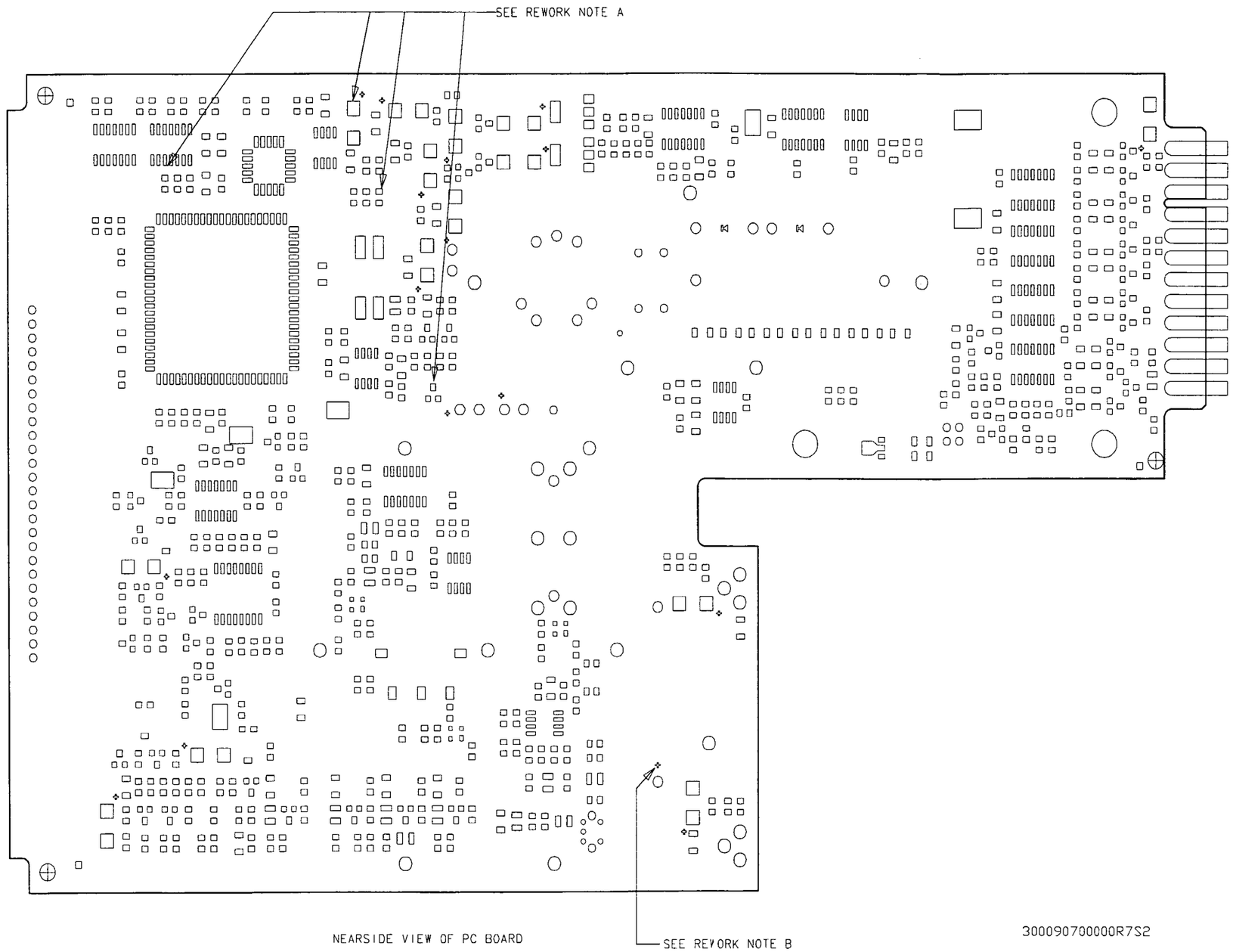


300090700000R7S2

**FIGURE 6-8A KT 76A/78A Main Board (S/N ≥ 110,000)**
**(Dwg. No. 300-09070-0000 R-7)**
**(Sheet 2 of 3)**

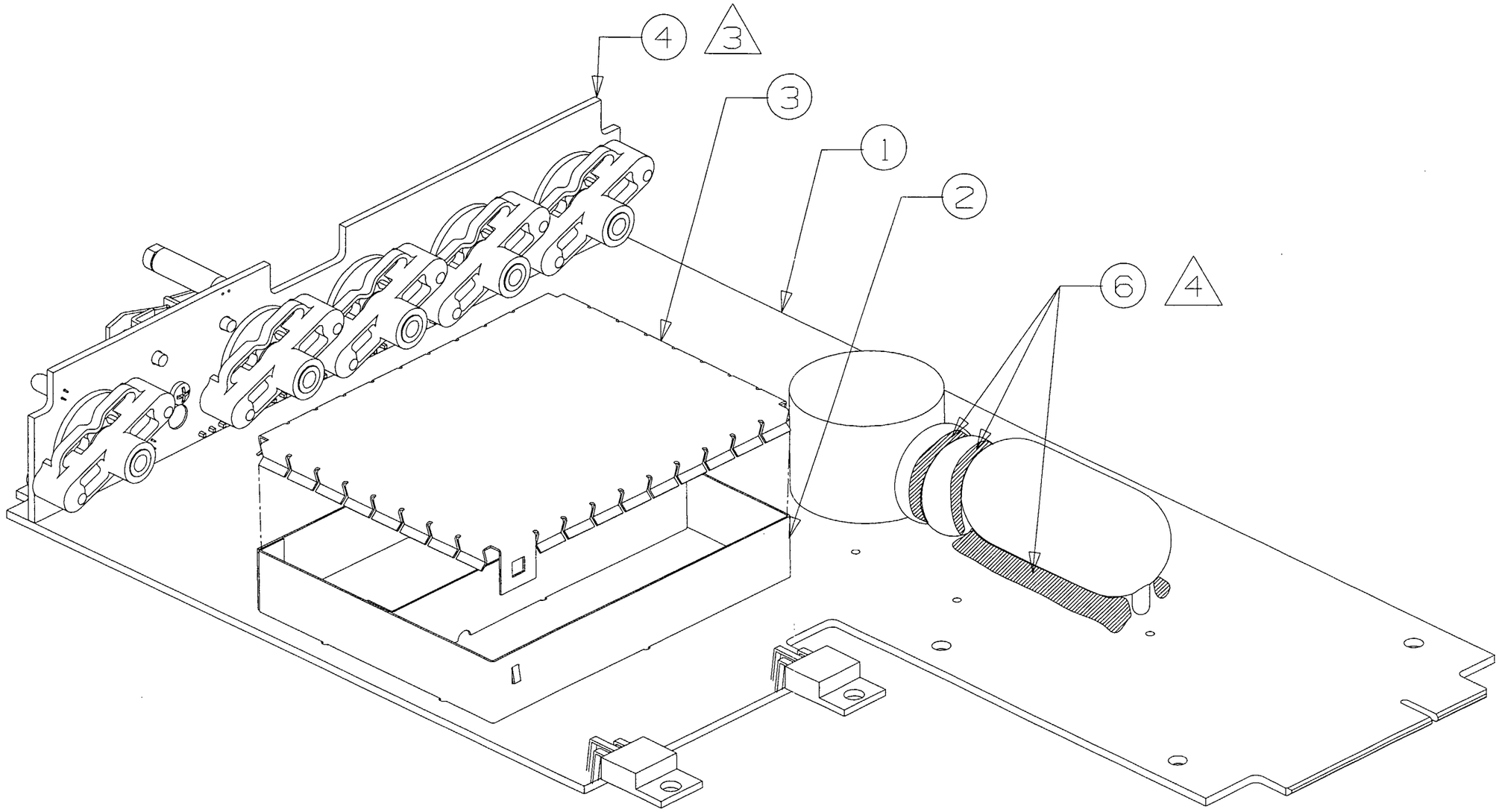


NOTE: MANY COMPONENTS NOT SHOWN. COMPONENTS SHOWN ARE FOR REFERENCE ONLY.

300090700000R7S3

**FIGURE 6-8A KT 76A/78A Main Board (S/N ≥ 110,000)**
**(Dwg. No. 300-09070-0000 R-7)**
**(Sheet 3 of 3)**

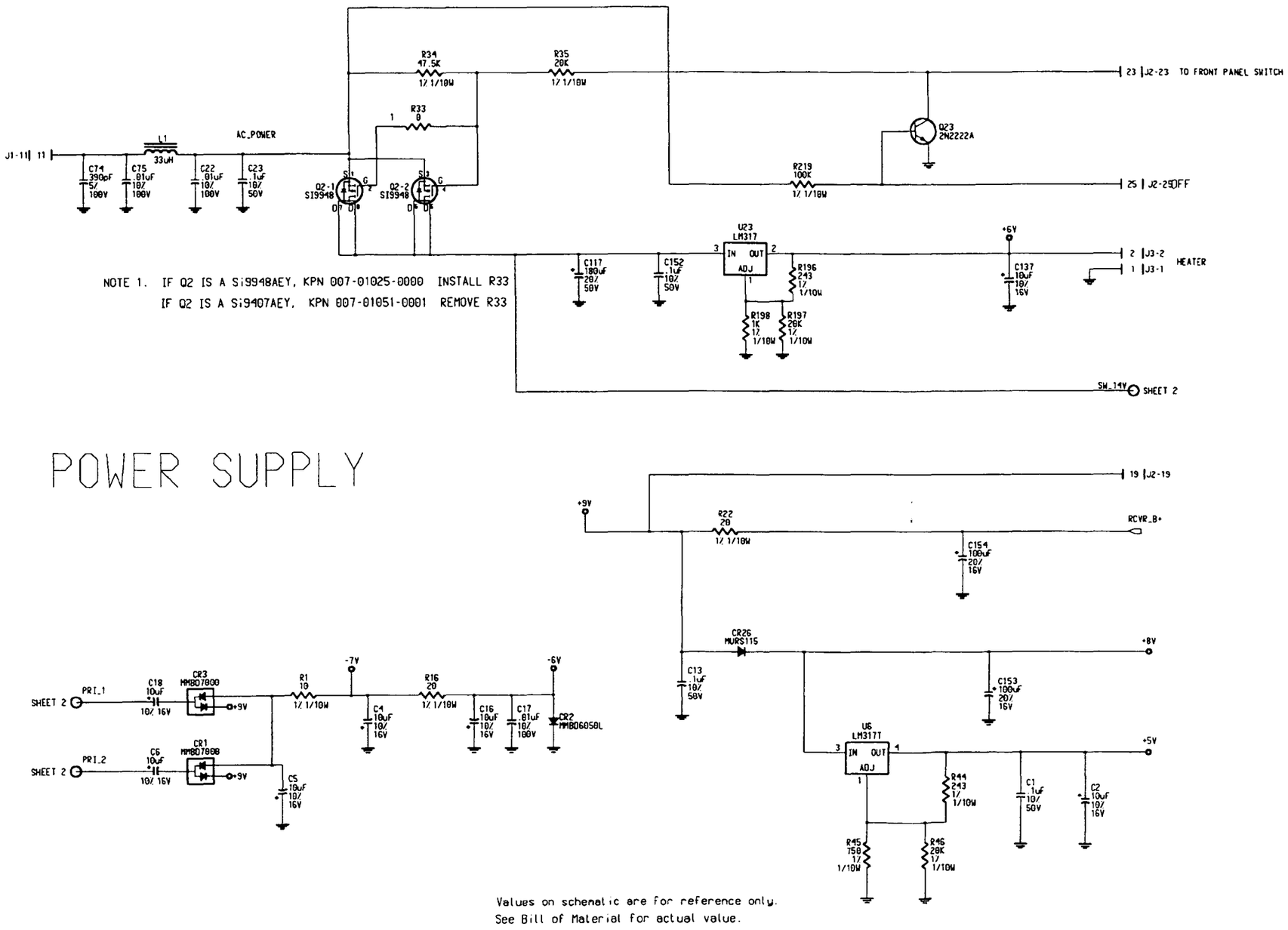


**FIGURE 6-9 KT 76A/78A Main Board Schematic (S/N ≥ 120,800)**
**(Dwg. No. 002-09070-0020 R-C)**
**(Sheet 1 of 8)**

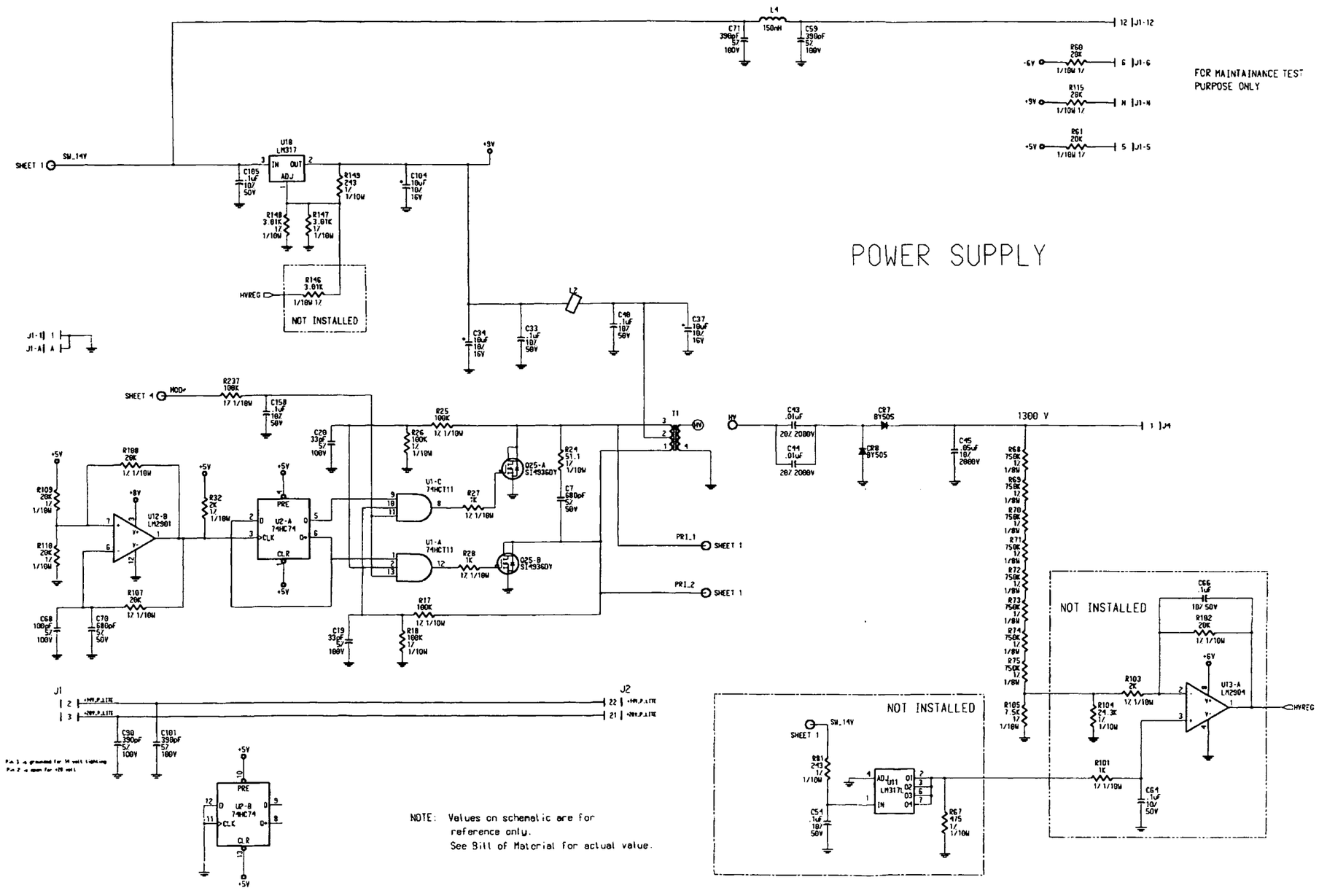


**FIGURE 6-9 KT 76A/78A Main Board Schematic (S/N ≥ 120,800)**
**(Dwg. No. 002-09070-0020 R-C)**
**(Sheet 2 of 8)**

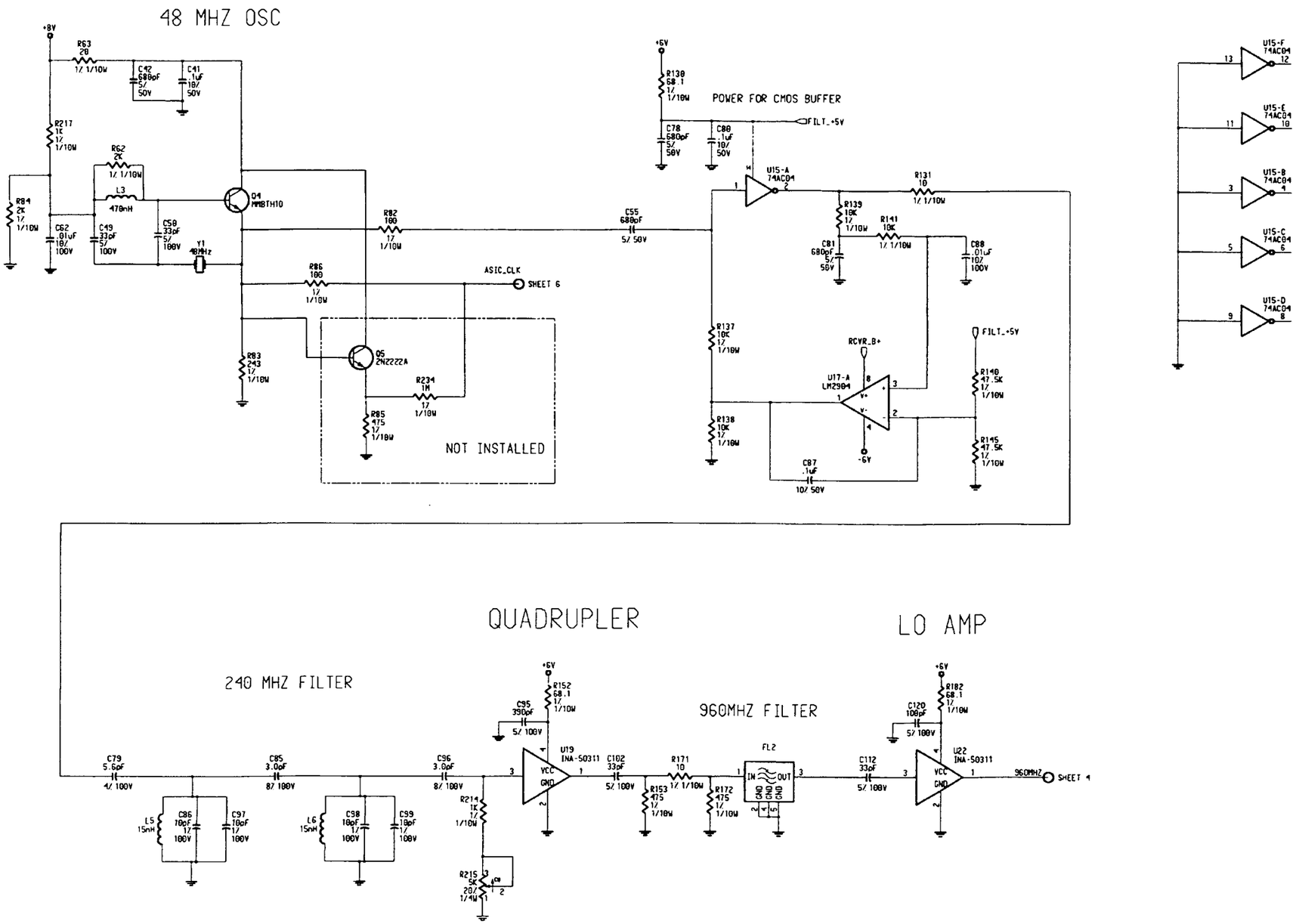


**FIGURE 6-9 KT 76A/78A Main Board Schematic (S/N ≥ 120,800)**
**(Dwg. No. 002-09070-0020 R-C)**
**(Sheet 3 of 8)**

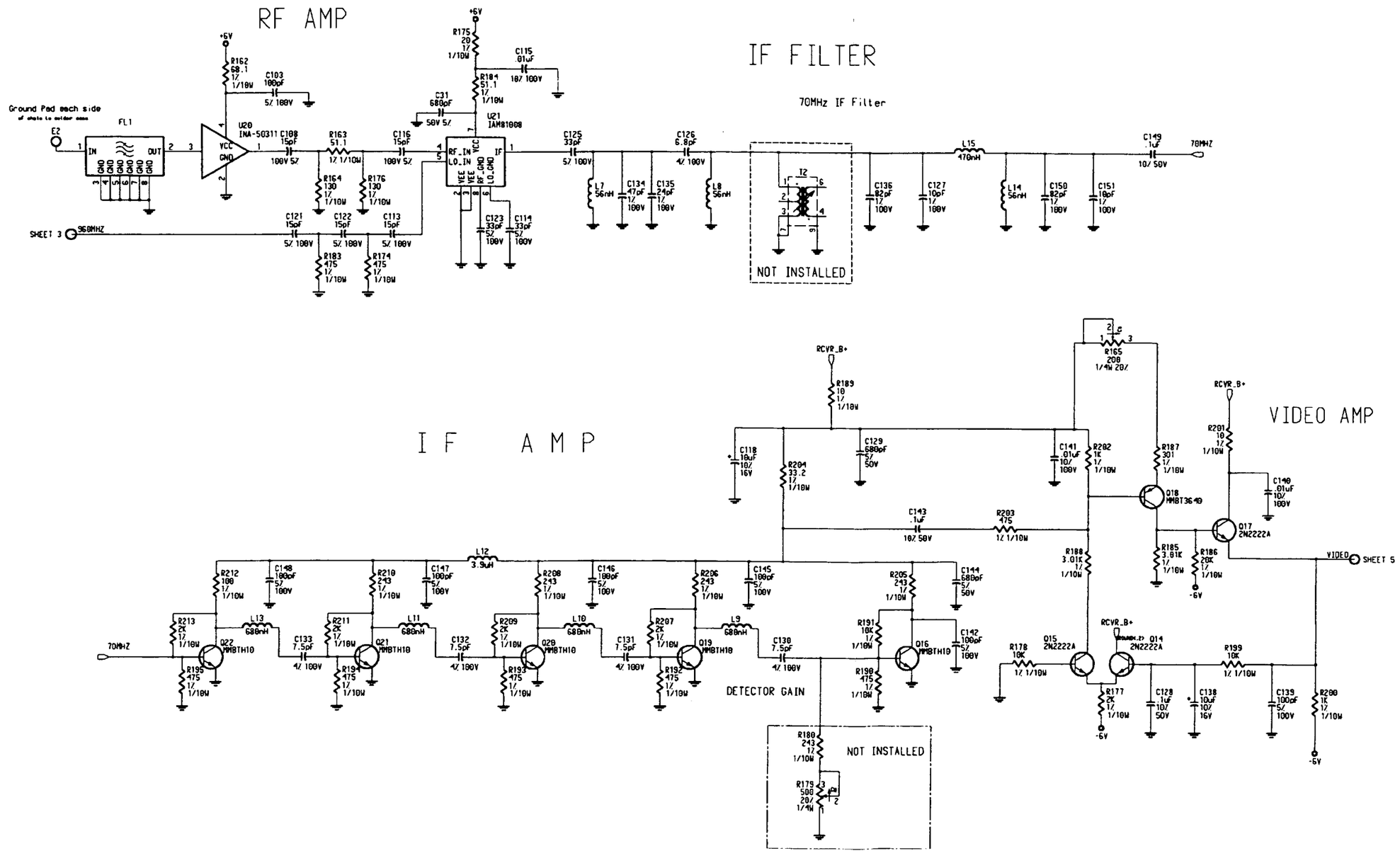


**FIGURE 6-9 KT 76A/78A Main Board Schematic (S/N ≥ 120,800)**
**(Dwg. No. 002-09070-0020 R-C)**
**(Sheet 4 of 8)**

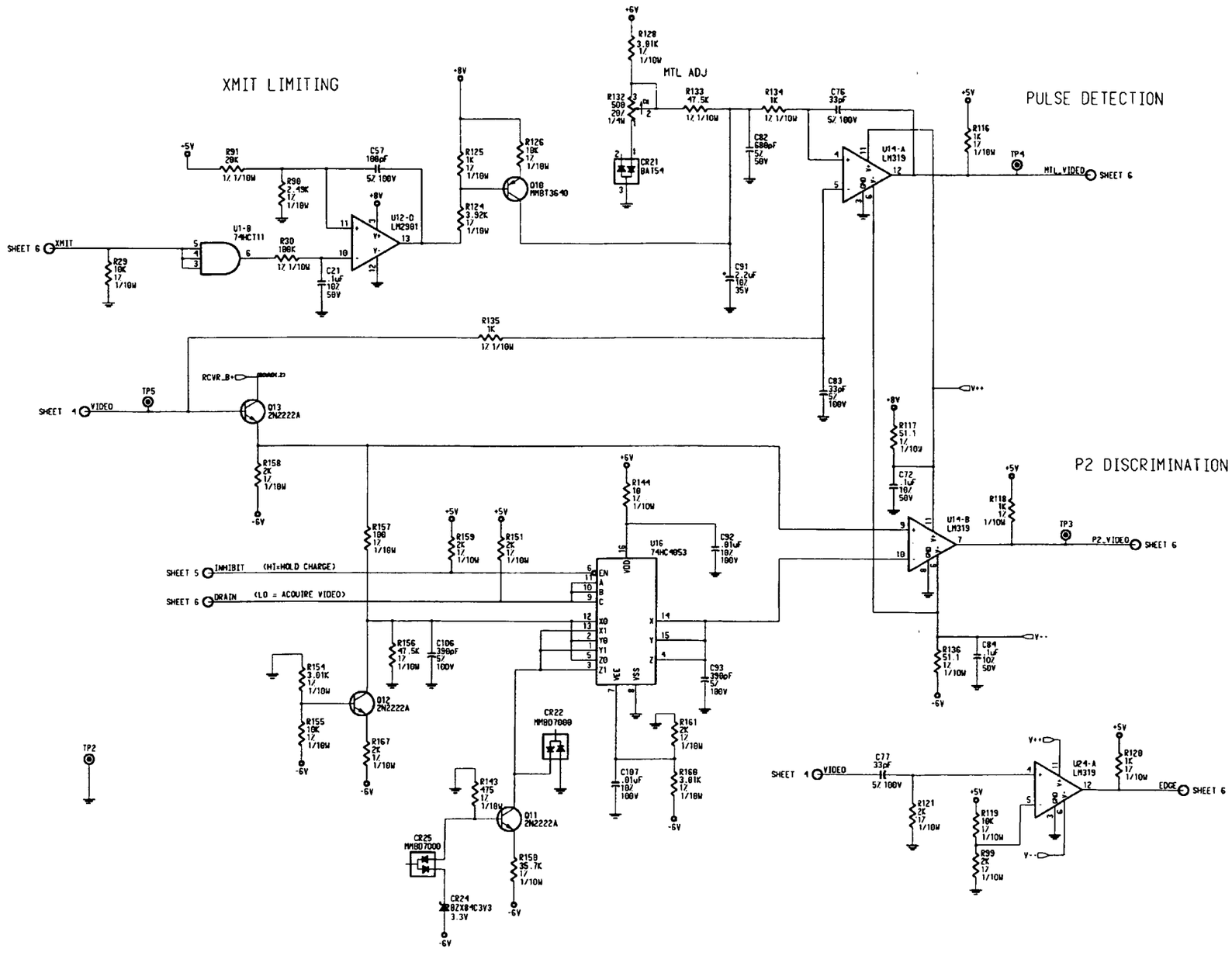


**FIGURE 6-9 KT 76A/78A Main Board Schematic (S/N ≥ 120,800)**
**(Dwg. No. 002-09070-0020 R-C)**
**(Sheet 5 of 8)**

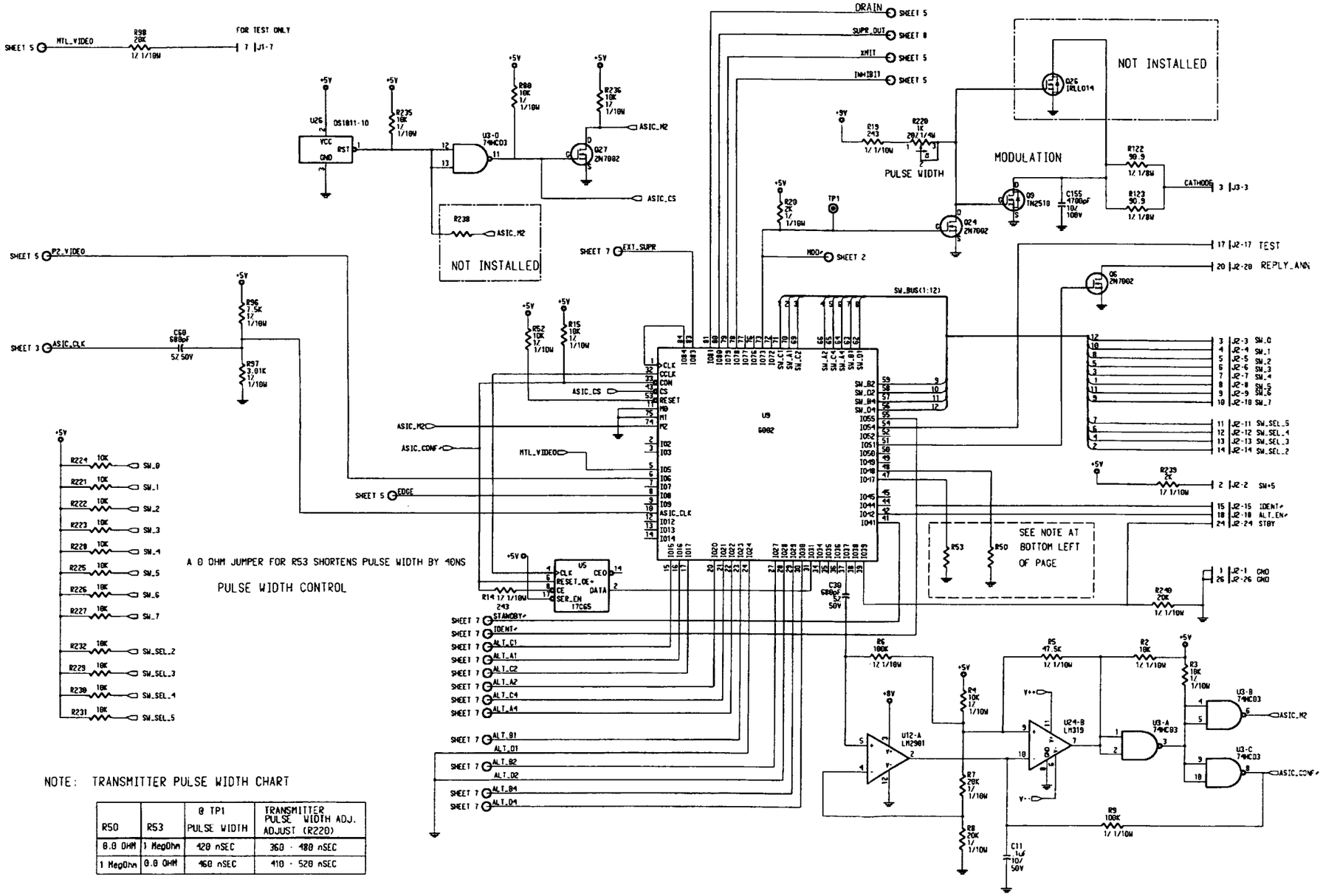


NOTE: TRANSMITTER PULSE WIDTH CHART

| R50 | R53 | @ TP1 PULSE WIDTH | TRANSMITTER PULSE WIDTH ADJ. ADJUST (R220) |
|---|---|---|---|
| 0.0 OHM | 1 MegOhm | 420 nSEC | 360 - 480 nSEC |
| 1 MegOhm | 0.0 OHM | 460 nSEC | 410 - 520 nSEC |

**FIGURE 6-9 KT 76A/78A Main Board Schematic (S/N ≥ 120,800)**
**(Dwg. No. 002-09070-0020 R-C)**
**(Sheet 6 of 8)**

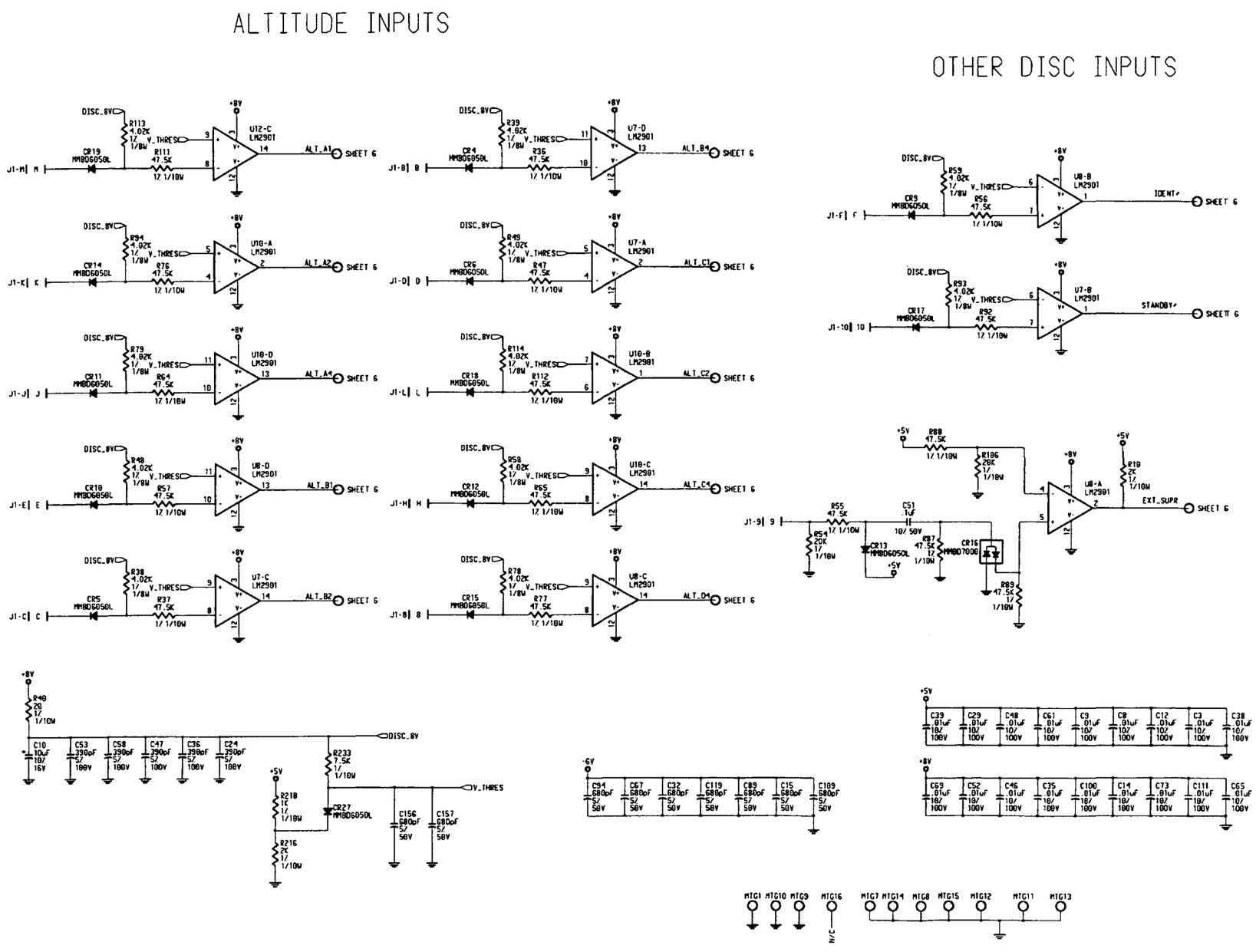


**FIGURE 6-9 KT 76A/78A Main Board Schematic (S/N ≥ 120,800)**
**(Dwg. No. 002-09070-0020 R-C)**
**(Sheet 7 of 8)**

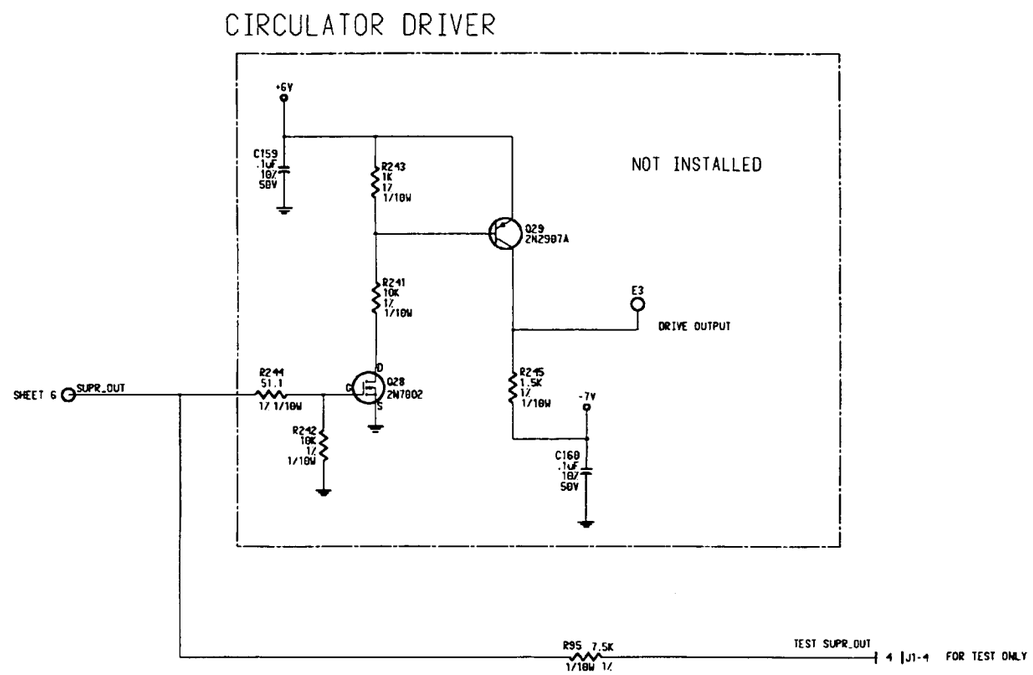


**FIGURE 6-9 KT 76A/78A Main Board Schematic (S/N ≥ 120,800)**
**(Dwg. No. 002-09070-0020 R-C)**
**(Sheet 8 of 8)**

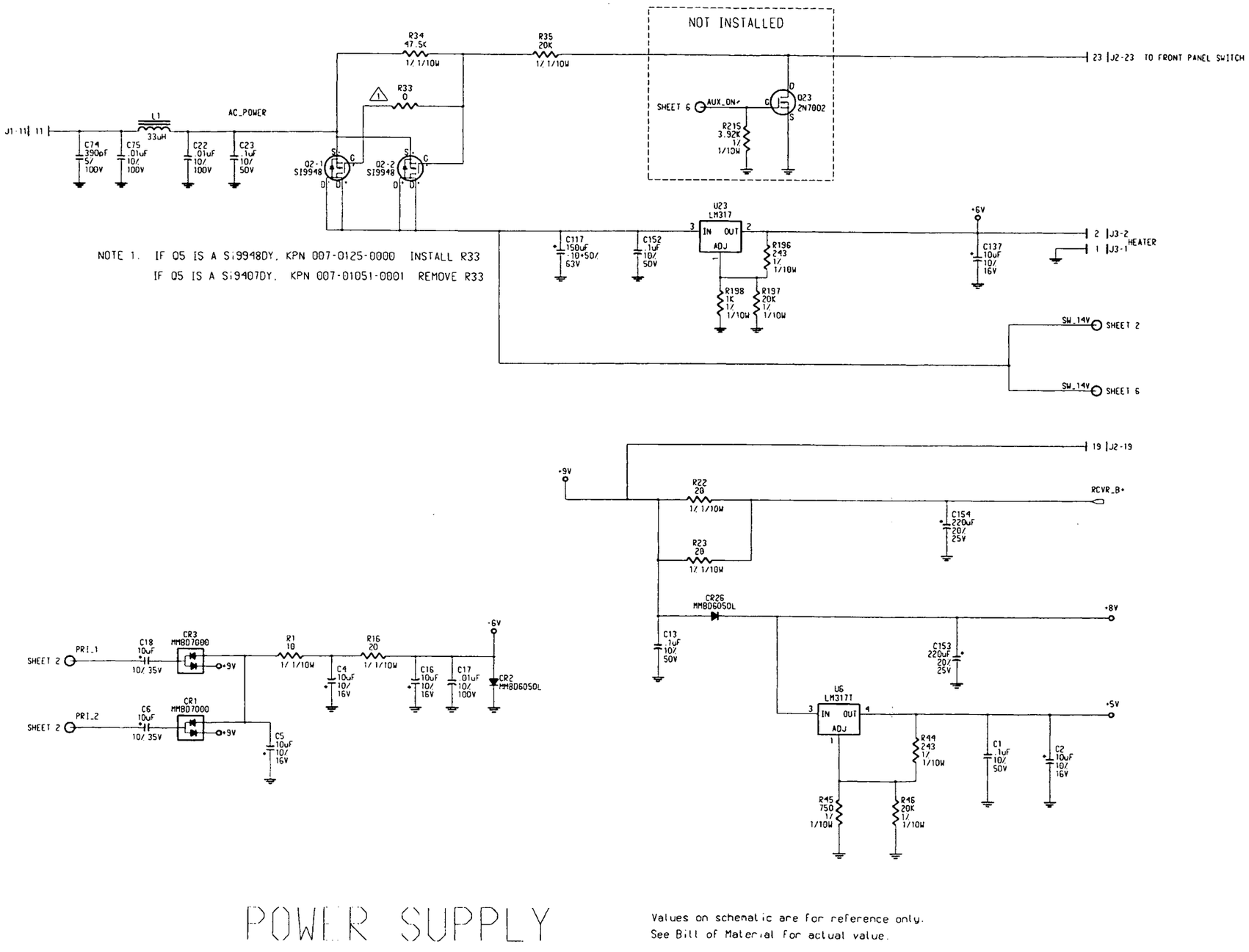


**FIGURE 6-10 KT 76A/78A Main Board Schematic (S/N ≥ 110,000)**
**(Dwg. No. 002-09070-0000 R-11)**
**(Sheet 1 of 7)**

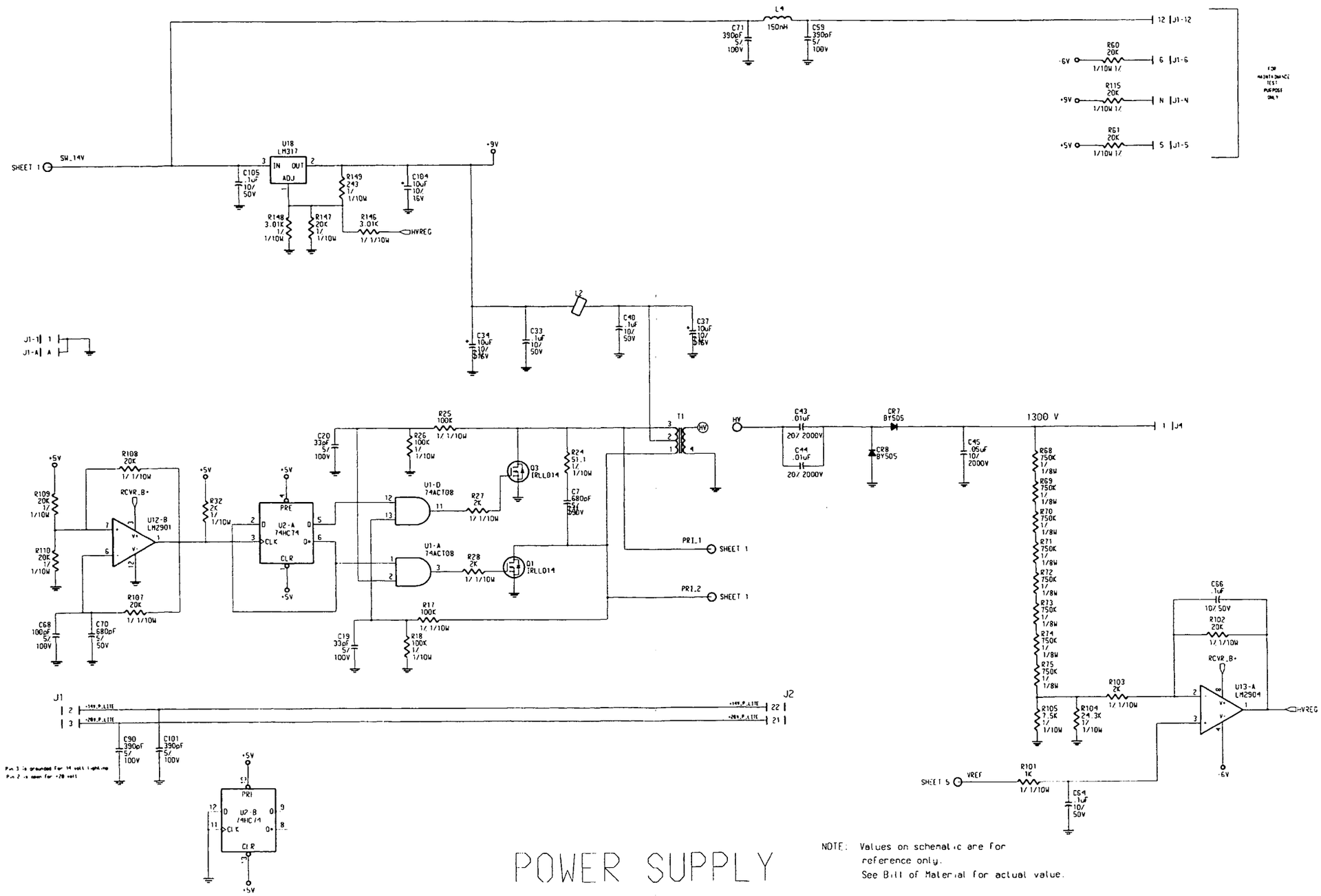


**FIGURE 6-10 KT 76A/78A Main Board Schematic (S/N ≥ 110,000)**
**(Dwg. No. 002-09070-0000 R-11)**
**(Sheet 2 of 7)**

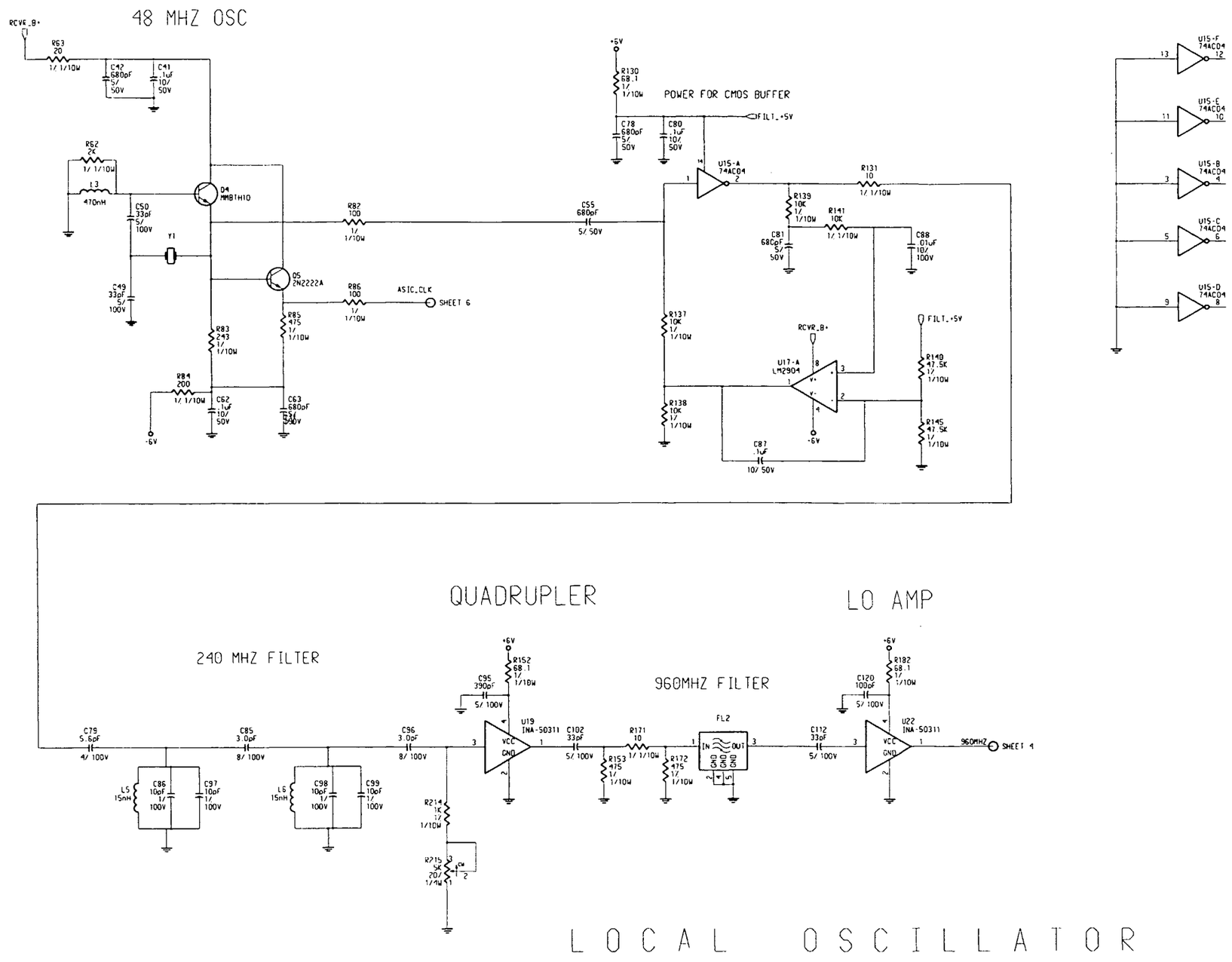


**FIGURE 6-10 KT 76A/78A Main Board Schematic (S/N ≥ 110,000)**
**(Dwg. No. 002-09070-0000 R-11)**
**(Sheet 3 of 7)**

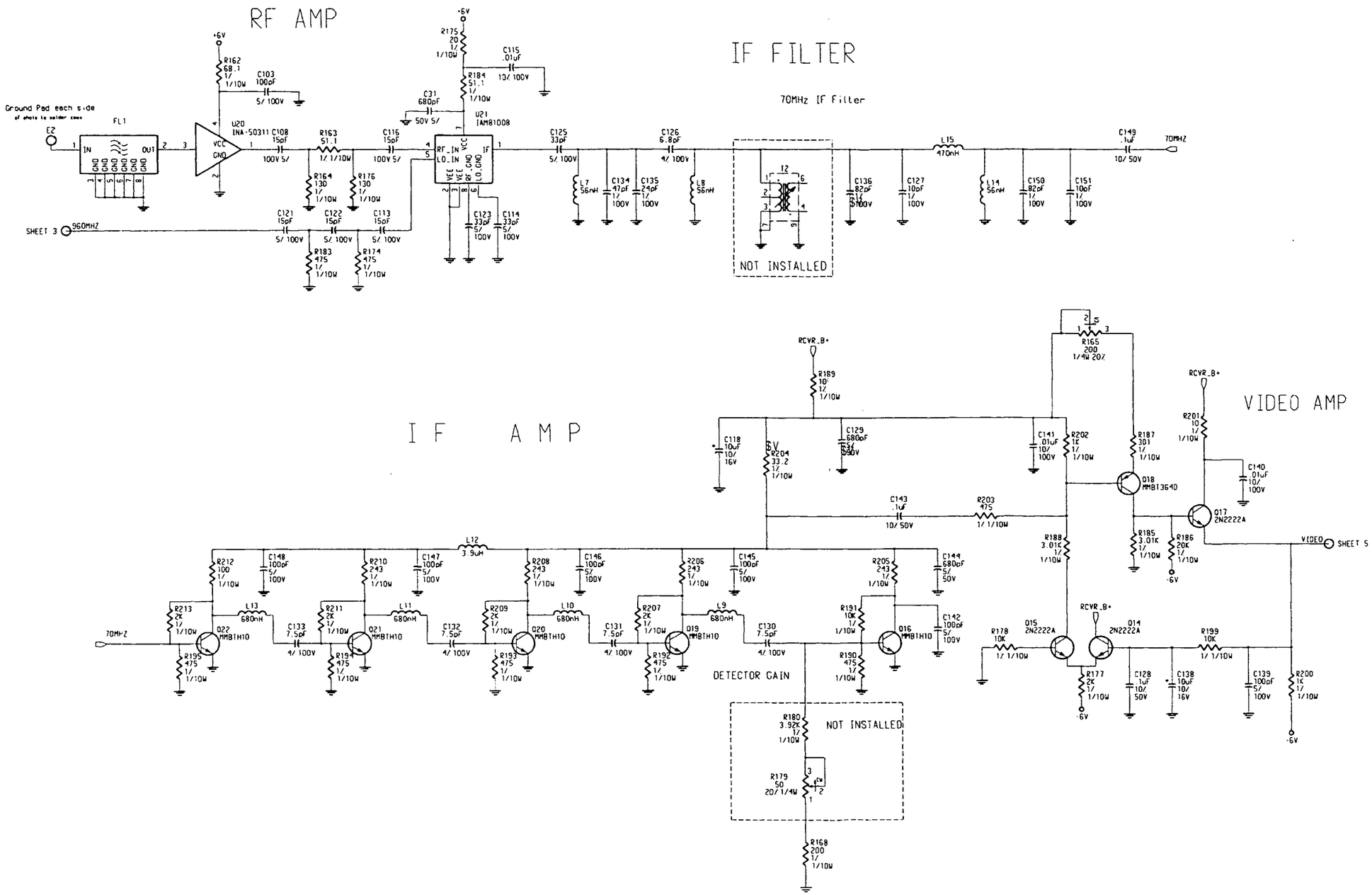


**FIGURE 6-10 KT 76A/78A Main Board Schematic (S/N ≥ 110,000)**
**(Dwg. No. 002-09070-0000 R-11)**
**(Sheet 4 of 7)**

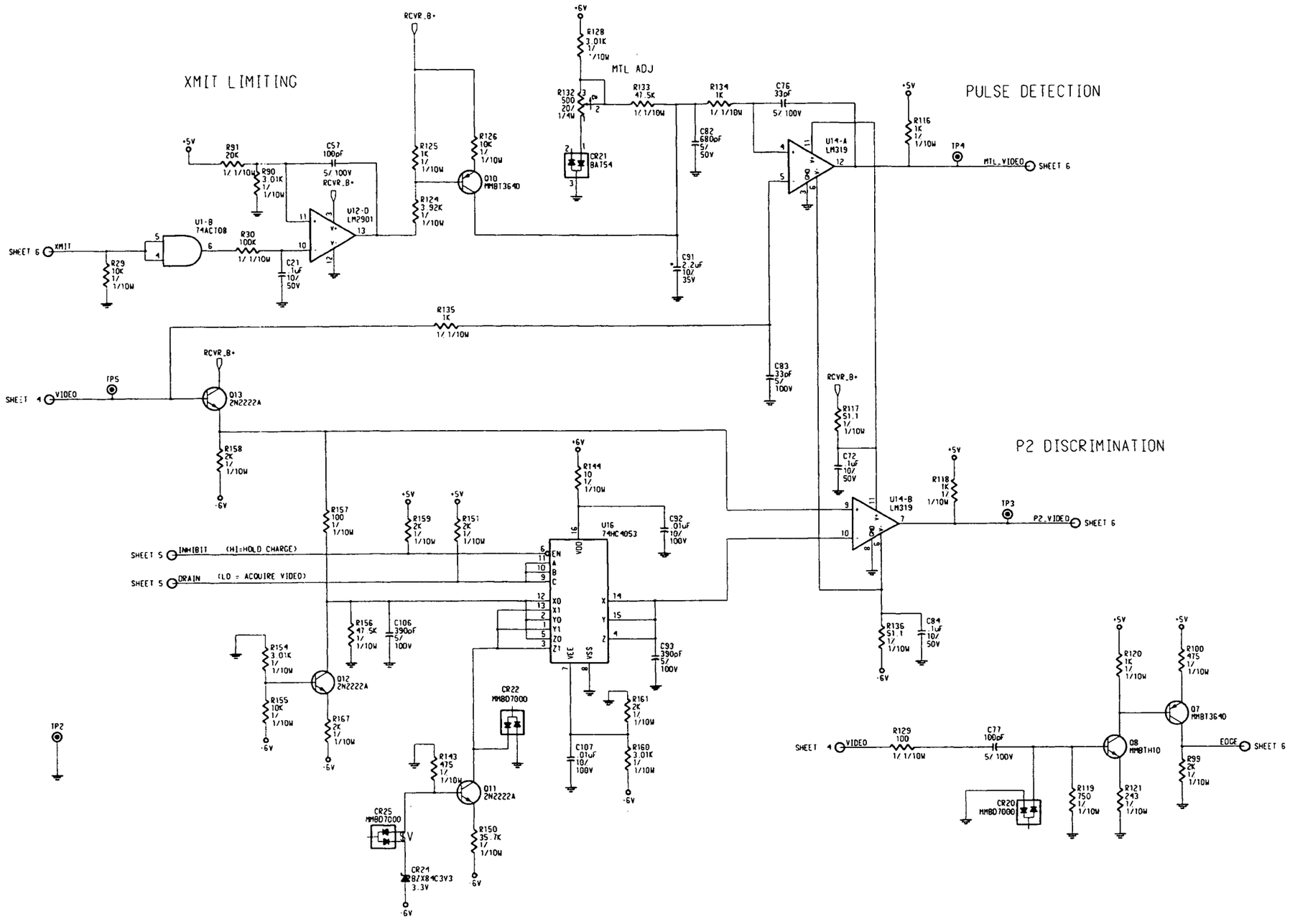


**FIGURE 6-10 KT 76A/78A Main Board Schematic (S/N ≥ 110,000)**
**(Dwg. No. 002-09070-0000 R-11)**
**(Sheet 5 of 7)**

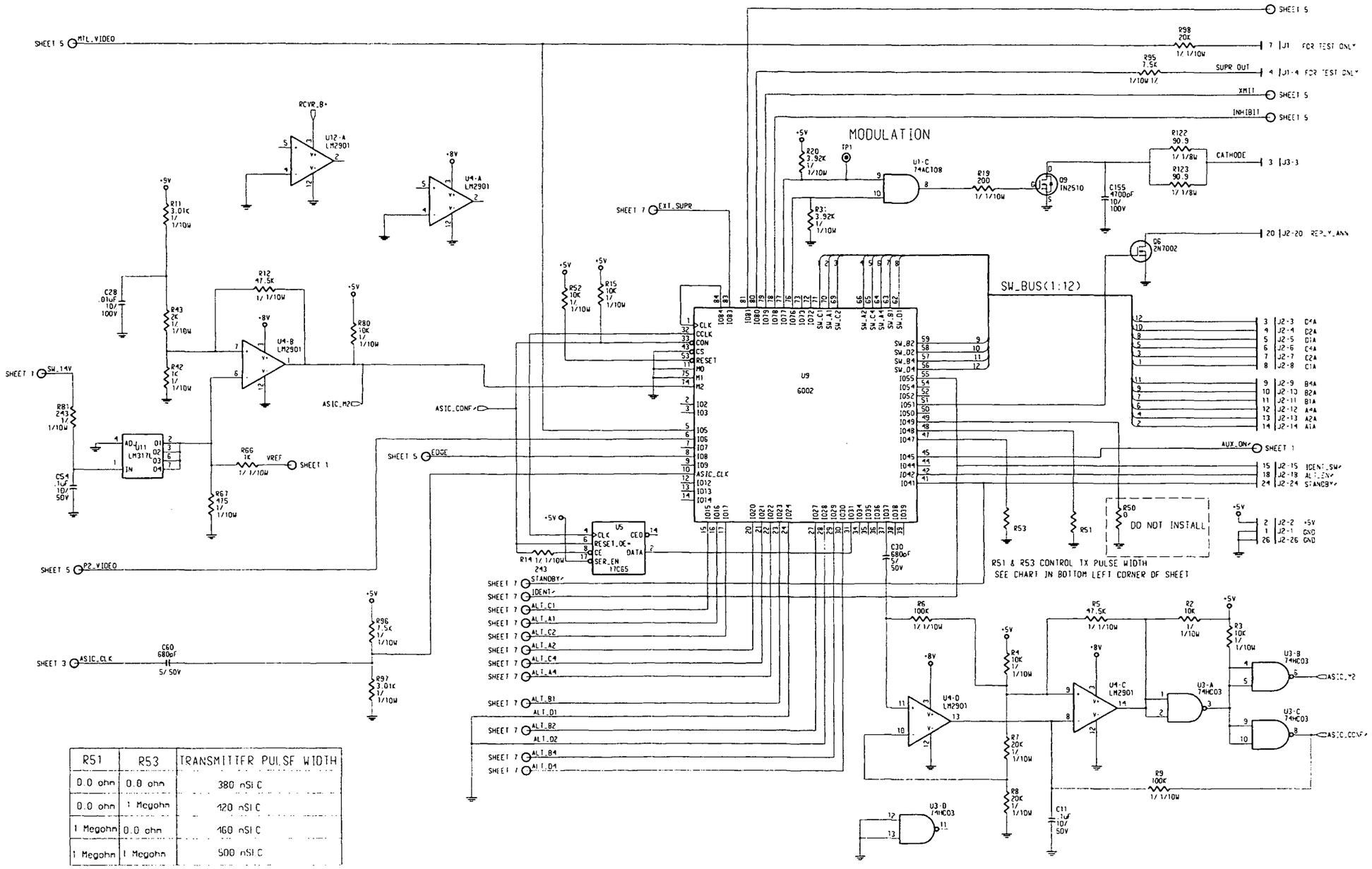


| R51 | R53 | TRANSMITTER PULSE WIDTH |
|---|---|---|
| 0.0 ohm | 0.0 ohm | 380 nSEC |
| 0.0 ohm | 1 Megohm | 420 nSEC |
| 1 Megohm | 0.0 ohm | 460 nSEC |
| 1 Megohm | 1 Megohm | 500 nSEC |

**FIGURE 6-10 KT 76A/78A Main Board Schematic (S/N ≥ 110,000)**
**(Dwg. No. 002-09070-0000 R-11)**
**(Sheet 6 of 7)**

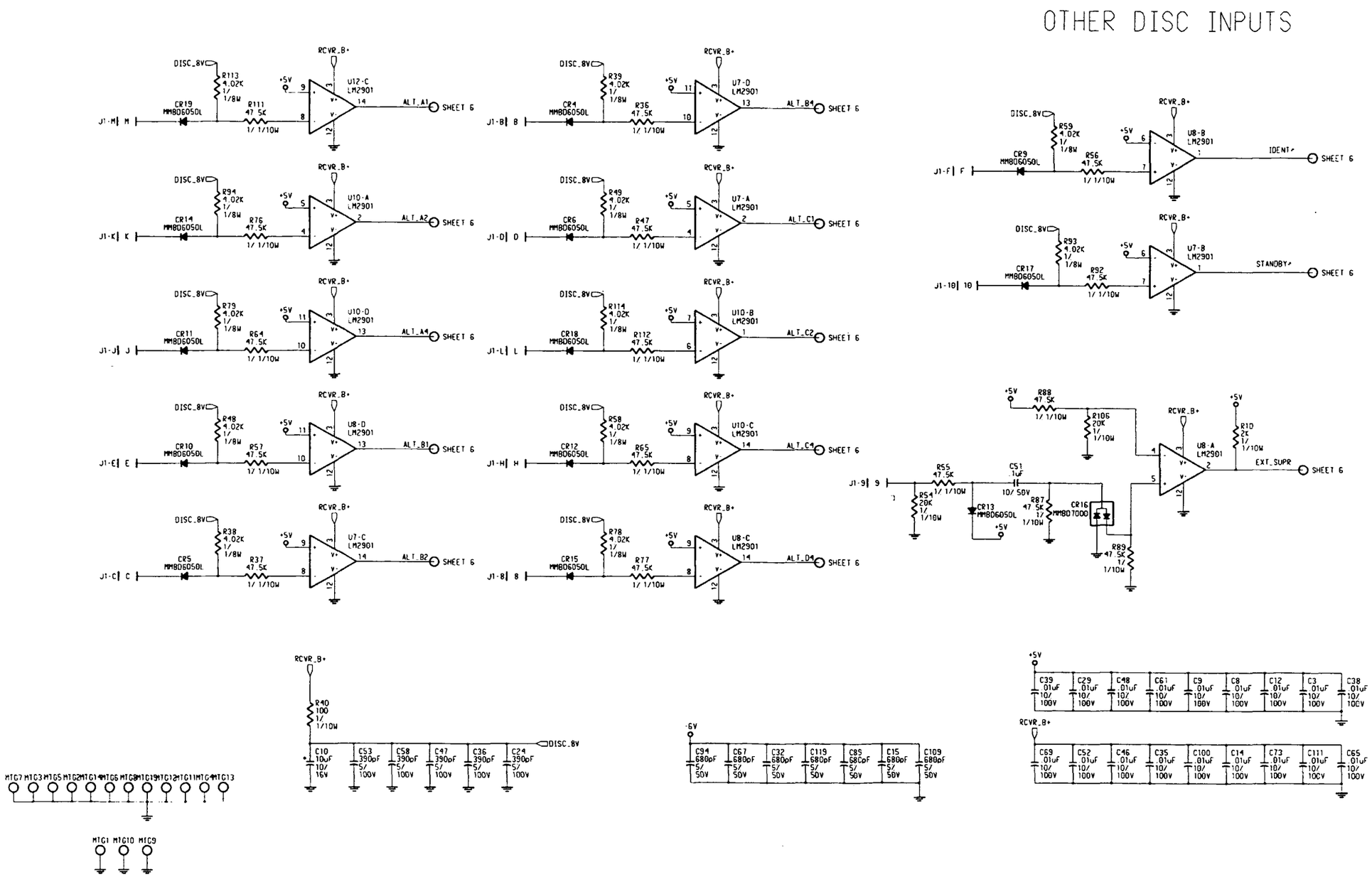


**FIGURE 6-10 KT 76A/78A Main Board Schematic (S/N ≥ 110,000)**
**(Dwg. No. 002-09070-0000 R-11)**
**(Sheet 7 of 7)**

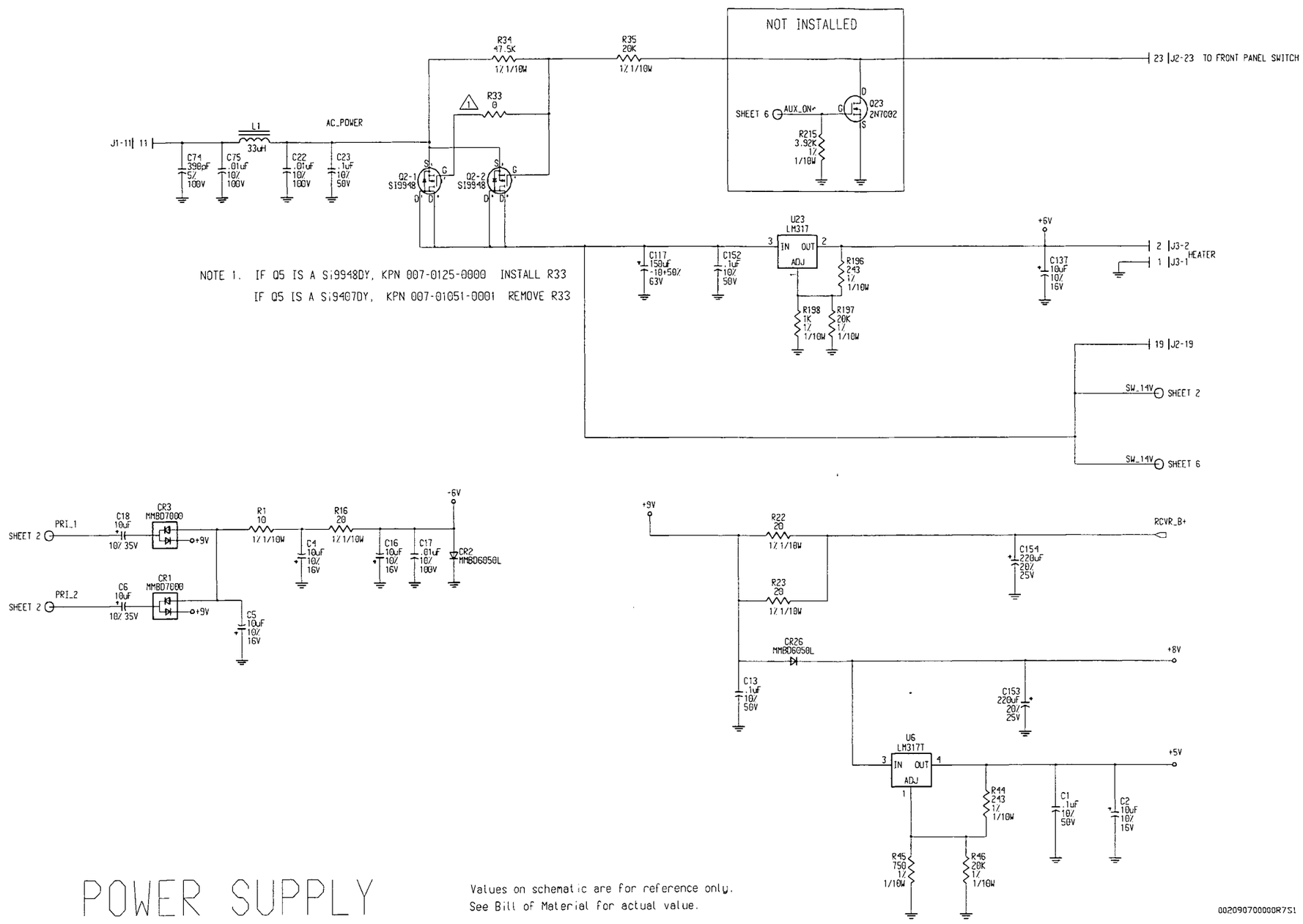


POWER SUPPLY

Values on schematic are for reference only.
See Bill of Material for actual value.

**FIGURE 6-10A KT 76A/78A Main Board Schematic (S/N ≥ 110,000)**
**(Dwg. No. 002-09070-0000 R-7)**
**(Sheet 1 of 7)**

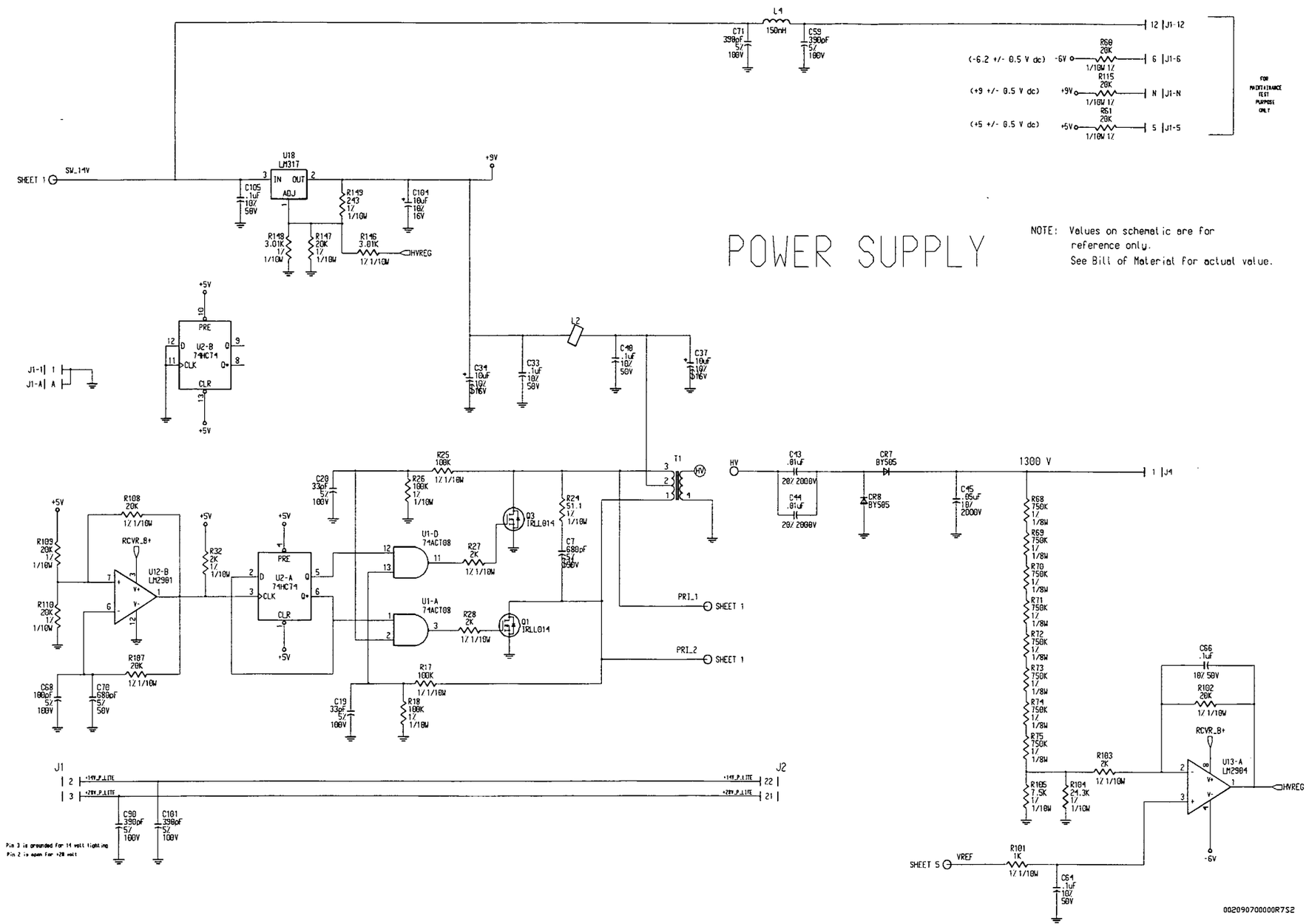


**FIGURE 6-10A KT 76A/78A Main Board Schematic (S/N ≥ 110,000)**
**(Dwg. No. 002-09070-0000 R-7)**
**(Sheet 2 of 7)**

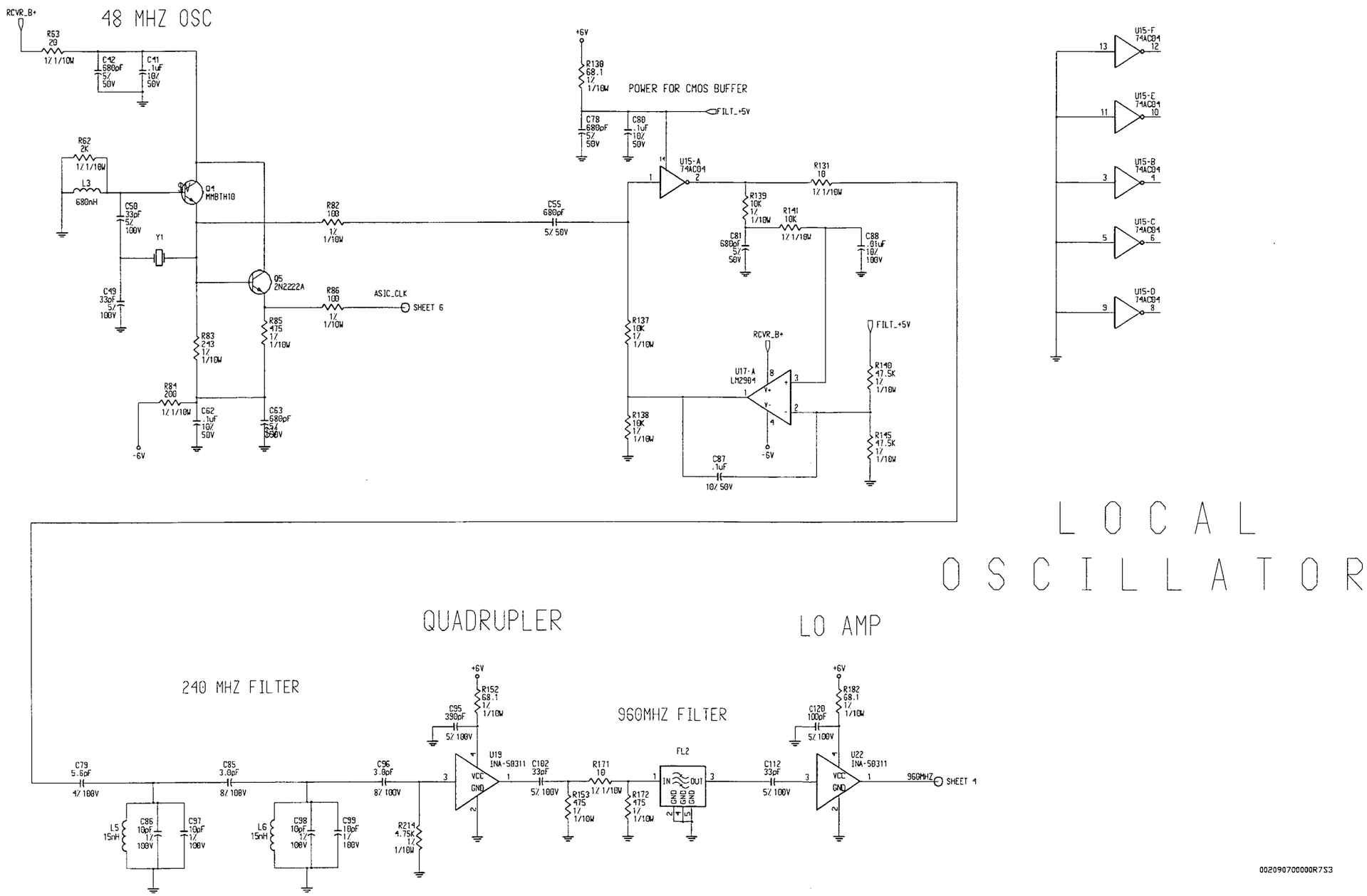


**FIGURE 6-10A KT 76A/78A Main Board Schematic (S/N ≥ 110,000)**
**(Dwg. No. 002-09070-0000 R-7)**
**(Sheet 3 of 7)**

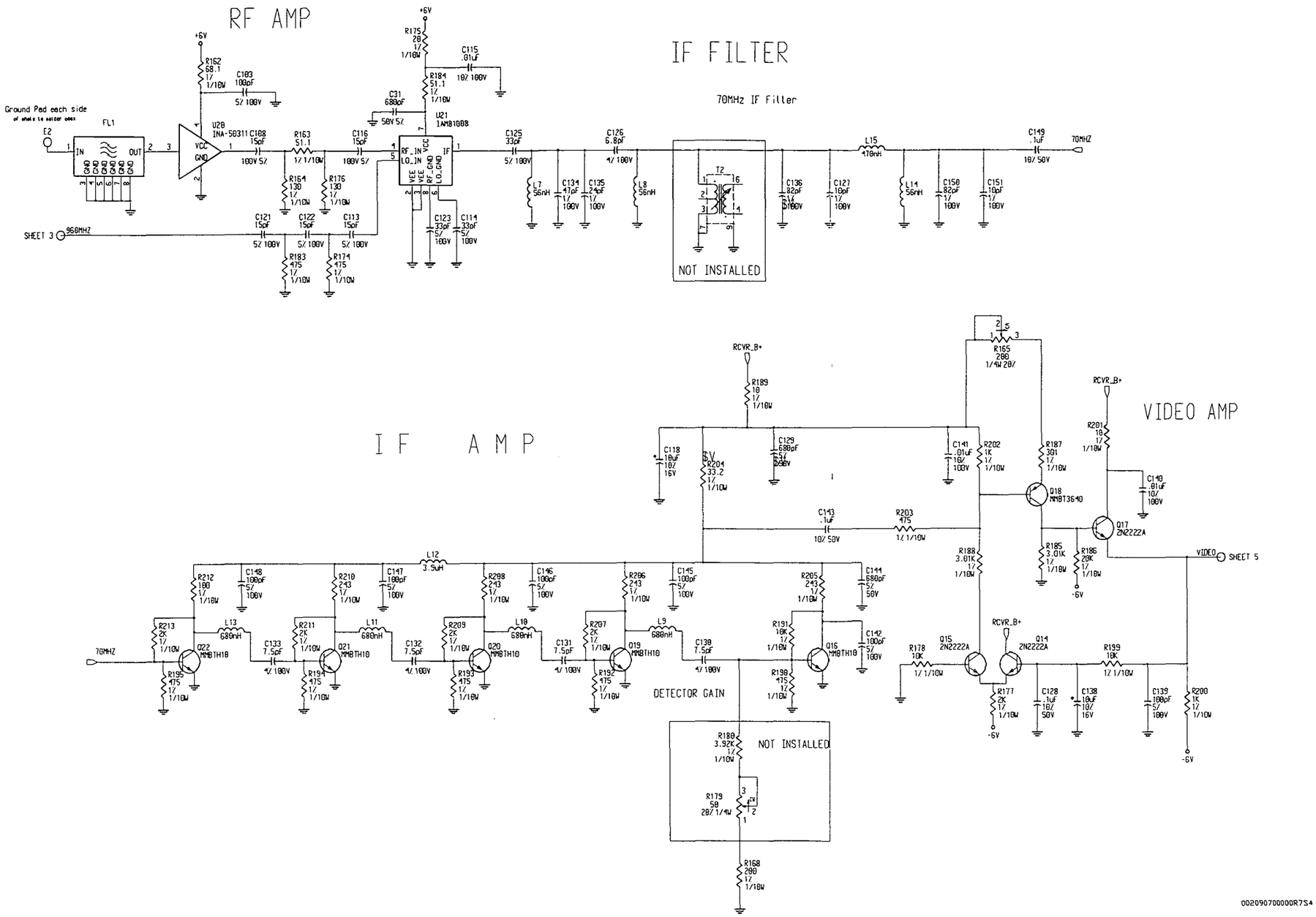


**FIGURE 6-10A KT 76A/78A Main Board Schematic (S/N ≥ 110,000)**
**(Dwg. No. 002-09070-0000 R-7)**
**(Sheet 4 of 7)**

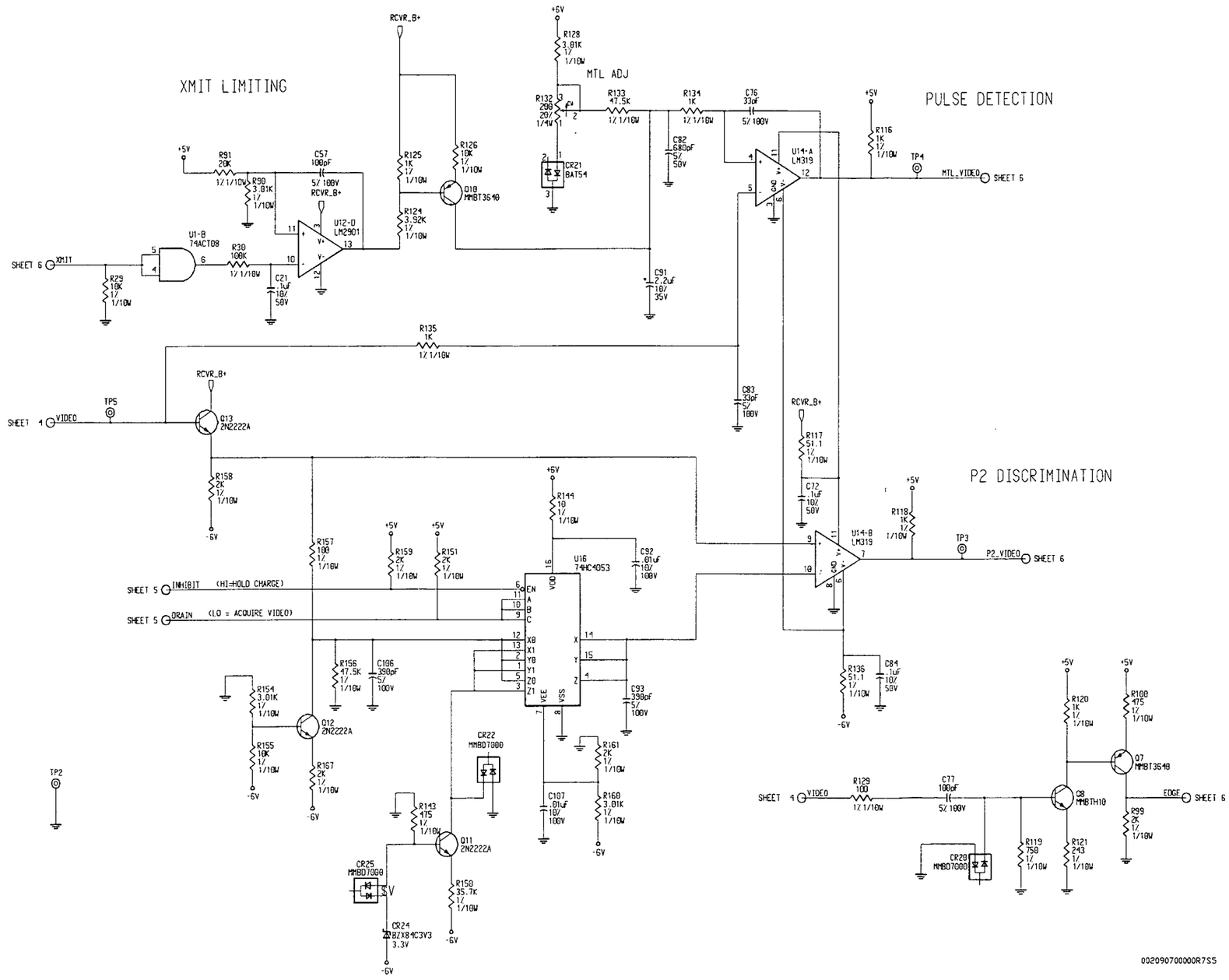


**FIGURE 6-10A KT 76A/78A Main Board Schematic (S/N ≥ 110,000)**
**(Dwg. No. 002-09070-0000 R-7)**
**(Sheet 5 of 7)**

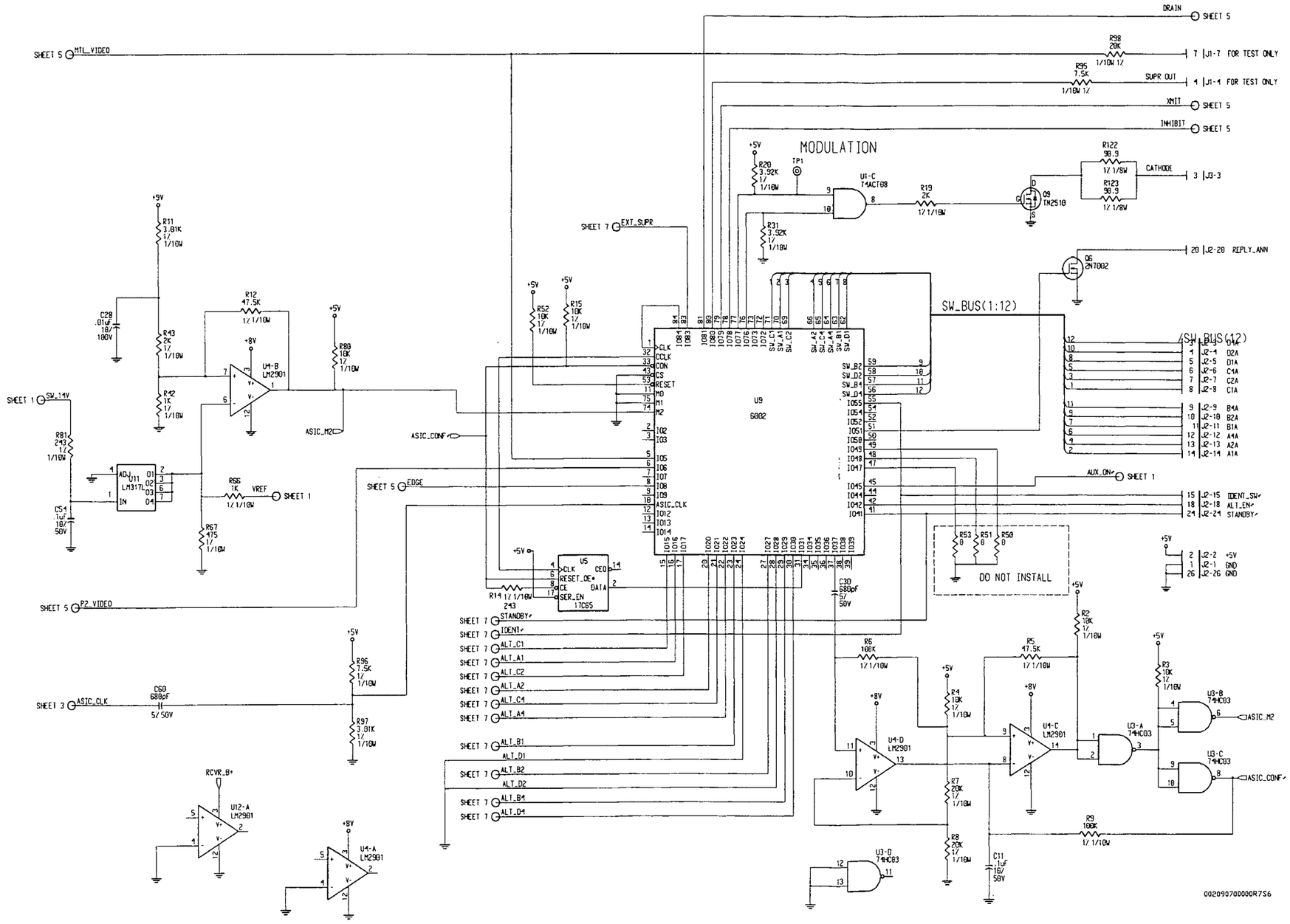


**FIGURE 6-10A KT 76A/78A Main Board Schematic (S/N ≥ 110,000)**
**(Dwg. No. 002-09070-0000 R-7)**
**(Sheet 6 of 7)**

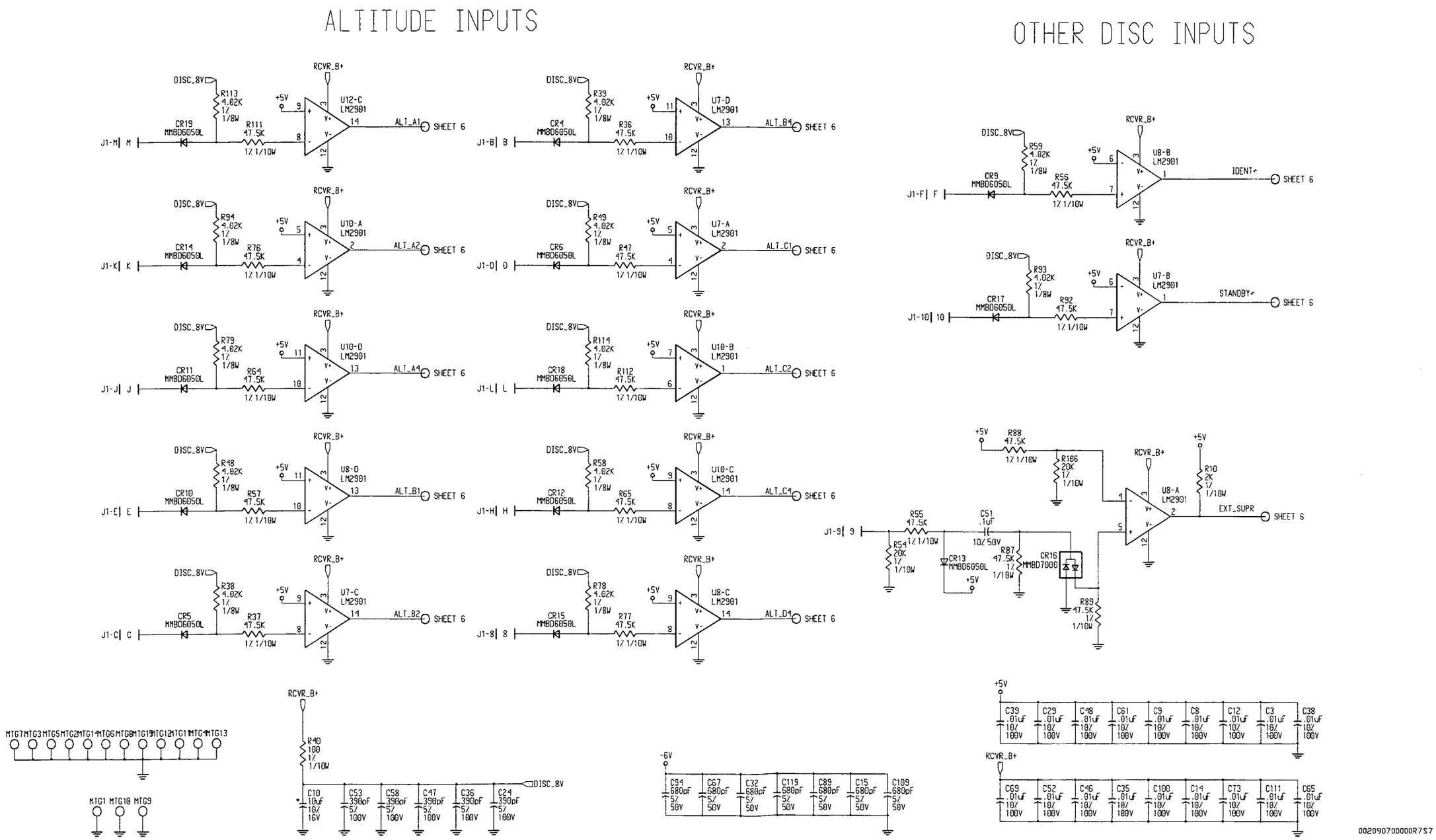


**FIGURE 6-10A KT 76A/78A Main Board Schematic (S/N ≥ 110,000)**
**(Dwg. No. 002-09070-0000 R-7)**
**(Sheet 7 of 7)**

## 6.5 MAIN BOARD

200-05824-0000 Rev. 27, KT 76A S/N 0 - 5899, KT78A S/N 0 - 2599
200-05824-0010 Rev. 13
200-05824-0020 Rev. 17, KT 76A S/N 5900 - 13,999, KT78A S/N 2600 - 6999
200-05824-0030 Rev. 24, KT 76A S/N 14,000 - 39,999, KT78A S/N 7000 -
200-05824-0040 Rev. 23, KT 76A S/N 40,000 - 109,999

| SYMBOL | PART NUMBER | DESCRIPTION | UM | QUANTITY | | | | |
|---|---|---|---|---|---|---|---|---|
| | | | | -0000 | -0010 | -0020 | -0030 | -0040 |
| | 008-00048-0000 | SLDRLS PIN RECPT | [EA] | | | | | 6 |
| | 009-05824-0001 | PC BD MAIN | [EA] | 1 | | | | |
| | 009-05824-0010 | PC BD MAIN | [EA] | | 1 | | | |
| | 009-05824-0020 | PC BD MAIN | [EA] | | | 1 | | |
| | 009-05824-0031 | PC BD MAIN | [EA] | | | | 1 | |
| | 009-05824-0040 | PC BD MAIN | [EA] | | | | | 1 |
| | 012-01005-0003 | TAPE MYLAR .250 W | [IN] | | | | 3.6 | 3.6 |
| | 012-01124-0001 | INSULATOR | [EA] | | | | 1 | 1 |
| | 012-01124-0002 | INSULATOR | [EA] | | | 1 | 1 | 1 |
| | 016-01082-0000 | DC RTV 3145 | [AR] | 0 | | 0 | 0 | 0 |
| | 016-01124-0000 | FOAM TAPE V1002 | [IN] | | 0.6 | 0.6 | 0.6 | 0.6 |
| | 026-00003-0000 | WIRE COP TIN 22G | [IN] | 1.2 | 1.2 | 1.2 | | |
| | 033-00092-0000 | IC DIP SCKT 40C | [EA] | 1 | 1 | 1 | 1 | |
| | 033-00138-0000 | INDIVIDUAL PLUGGAB | [EA] | | | | | 2 |
| | 047-04084-0001 | IF FENCE | [EA] | 1 | 1 | 1 | 1 | 1 |
| | 047-04585-0001 | IF CVR | [EA] | 1 | 1 | 1 | 1 | 1 |
| | 047-04586-0001 | BTM IF CVR | [EA] | 1 | 1 | 1 | 1 | 1 |
| | 047-05112-0000 | FINGER STOCK | [EA] | | | | 1 | 1 |
| | 057-01540-0000 | WARNING HV TAG | [EA] | 1 | 1 | 1 | 1 | 1 |
| | 088-00066-0000 | SPACER PLASTIC | [EA] | 2 | 2 | 2 | 2 | 2 |
| | 088-00721-0001 | REFLECTOR | [EA] | 1 | 1 | 1 | 1 | 1 |
| | 089-02076-0030 | NUT FLAT 4-40 | [EA] | 1 | 1 | 1 | 3 | 3 |
| | 089-05903-0004 | SCR PHP 4-40X1/4 | [EA] | 1 | 1 | 1 | 3 | 3 |
| | 089-06293-0003 | SCR PHP 3-48X3/16 | [EA] | 2 | 2 | 2 | 2 | 2 |
| | 089-08109-0034 | WSHR SPLT LK #4 | [EA] | 1 | 1 | 1 | 3 | 3 |
| | 090-00296-0000 | FUSE CLIP | [EA] | | 2 | 2 | 2 | 2 |
| | 091-00025-0000 | WSHR XSTR INSUL | [EA] | 1 | | 1 | 1 | 1 |
| | 091-00182-0000 | CAP SEMICN TO-5 | [EA] | | | | 1 | 1 |
| | 091-00196-0000 | STANDOFF BEAD | [AR] | 1 | 1 | 1 | 1 | 1 |
| | 091-00284-0000 | INSULATOR HV | [EA] | 1 | 1 | 1 | 1 | 1 |
| | 091-00285-0000 | DOME HEAD FASTENER | [EA] | 1 | 1 | 1 | 1 | 1 |
| | 150-00004-0010 | TUBING TFLN 22AWG | [IN] | 1.2 | 1.2 | 1.2 | 1.2 | 1.2 |
| | 150-00018-0010 | TUBING SHRINK WHT | [IN] | 1.2 | 1.2 | 1.2 | | |
| | 200-00381-0001 | SW BD ASSY 76A | [EA] | 1 | 1 | 1 | 1 | 1 |

| SYMBOL | PART NUMBER | DESCRIPTION | UM | QUANTITY | | | | |
|---|---|---|---|---|---|---|---|---|
| | | | | -0000 | -0010 | -0020 | -0030 | -0040 |
| C 401 | 101-00005-0001 | CAP PP .036UF 2KV | [EA] | 1 | 1 | 1 | 1 | 1 |
| C 402 | 101-00005-0000 | CAP PP .05UF 2KV | [EA] | 1 | 1 | 1 | 1 | 1 |
| C 403 | 117-07103-0000 | CAP DC .01UF 2KV | [EA] | 1 | 1 | 1 | 1 | 1 |
| C 404 | 097-00068-0020 | CAP AL 68UF 16V | [EA] | | | 1 | 1 | 1 |
| C 404 | 097-00068-0028 | CAP AL 68UF 16V | [EA] | 1 | | | | |
| C 404 | 097-00069-0001 | CAP AL 68UF 16V | [EA] | | 1 | | | |
| C 405 | 114-07203-0000 | CAP DC .02UF 200V | [EA] | 1 | 1 | 1 | 1 | 1 |
| C 406 | 105-00032-0042 | CAP MY.056UF10%200 | [EA] | 1 | 1 | 1 | 1 | |
| C 406 | 105-00168-0001 | CAP MYLAR .056 250 | [EA] | | | | | 1 |
| C 407 | 111-00009-0001 | CAP CR .01UF 10% | [EA] | 1 | 1 | 1 | 1 | 1 |
| C 408 | 111-00009-0001 | CAP CR .01UF 10% | [EA] | 1 | 1 | 1 | 1 | 1 |
| C 409 | 097-00068-0020 | CAP AL 68UF 16V | [EA] | | | 1 | 1 | 1 |
| C 409 | 097-00068-0028 | CAP AL 68UF 16V | [EA] | 1 | | | | |
| C 409 | 097-00069-0001 | CAP AL 68UF 16V | [EA] | | 1 | | | |
| C 410 | 097-00057-0029 | CAP AL 150UF 63V | [EA] | 1 | 1 | 1 | 1 | 1 |
| C 411 | 111-00009-0001 | CAP CR .01UF 10% | [EA] | 1 | 1 | 1 | 1 | 1 |
| C 412 | 113-05102-0000 | CAP DC .001UF 500V | [EA] | 1 | 1 | 1 | 1 | 1 |
| C 413 | 113-05102-0000 | CAP DC .001UF 500V | [EA] | 1 | 1 | 1 | 1 | 1 |
| C 414 | 113-05221-0001 | CAP DC 220PF 500V | [EA] | 1 | 1 | 1 | 1 | 1 |
| C 415 | 111-00001-0001 | CAP CR .1UF 50V | [EA] | 1 | 1 | 1 | 1 | 1 |
| C 416 | 114-07222-0000 | CAP DC 2200PF 500V | [EA] | 1 | 1 | 1 | 1 | 1 |
| C 417 | 113-05102-0000 | CAP DC .001UF 500V | [EA] | 1 | 1 | 1 | 1 | 1 |
| C 418 | 109-00003-0000 | CAP DC 2.2PF 1KV | [EA] | 1 | 1 | 1 | 1 | 1 |
| C 419 | 111-00009-0001 | CAP CR .01UF 10% | [EA] | 1 | 1 | 1 | 1 | 1 |
| C 420 | 113-03330-0000 | CAP DC 33PF 500V | [EA] | 1 | 1 | 1 | 1 | 1 |
| C 421 | 113-03330-0000 | CAP DC 33PF 500V | [EA] | 1 | 1 | 1 | 1 | 1 |
| C 422 | 113-05102-0000 | CAP DC .001UF 500V | [EA] | 1 | 1 | 1 | 1 | 1 |
| C 423 | 109-00003-0000 | CAP DC 2.2PF 1KV | [EA] | 1 | 1 | 1 | 1 | 1 |
| C 424 | 111-00009-0001 | CAP CR .01UF 10% | [EA] | 1 | 1 | 1 | 1 | 1 |
| C 425 | 113-03330-0000 | CAP DC 33PF 500V | [EA] | 1 | 1 | 1 | 1 | 1 |
| C 426 | 113-03330-0000 | CAP DC 33PF 500V | [EA] | 1 | 1 | 1 | 1 | 1 |
| C 427 | 113-05102-0000 | CAP DC .001UF 500V | [EA] | 1 | 1 | 1 | 1 | 1 |
| C 428 | 109-00003-0000 | CAP DC 2.2PF 1KV | [EA] | 1 | 1 | 1 | 1 | 1 |
| C 429 | 111-00009-0001 | CAP CR .01UF 10% | [EA] | 1 | 1 | 1 | 1 | 1 |
| C 430 | 113-03330-0000 | CAP DC 33PF 500V | [EA] | 1 | 1 | 1 | 1 | 1 |
| C 431 | 113-03330-0000 | CAP DC 33PF 500V | [EA] | 1 | 1 | 1 | 1 | 1 |
| C 432 | 111-00009-0001 | CAP CR .01UF 10% | [EA] | 1 | 1 | 1 | 1 | 1 |
| C 433 | 109-00003-0001 | CAP DC 4.7PF 1KV | [EA] | 1 | 1 | 1 | 1 | 1 |
| C 434 | 113-05102-0000 | CAP DC .001UF 500V | [EA] | 1 | 1 | 1 | 1 | 1 |

| SYMBOL | PART NUMBER | DESCRIPTION | UM | QUANTITY | | | | |
|---|---|---|---|---|---|---|---|---|
| | | | | -0000 | -0010 | -0020 | -0030 | -0040 |
| C 435 | 096-01030-0000 | CAP TN 1UF 20V 10% | [EA] | 1 | 1 | 1 | 1 | 1 |
| C 436 | 111-00001-0000 | CAP CR .01UF 50V | [EA] | 1 | 1 | 1 | 1 | 1 |
| C 437 | 096-01030-0000 | CAP TN 1UF 20V 10% | [EA] | 1 | 1 | 1 | 1 | 1 |
| C 438 | 104-00001-0004 | CAP SM 470PF 100V | [EA] | 1 | 1 | 1 | 1 | 1 |
| C 439 | 114-07104-0000 | CAP DC .1UF 16V | [EA] | 1 | 1 | 1 | 1 | 1 |
| C 440 | 096-01030-0005 | CAP TN 10UF 10%20V | [EA] | 1 | 1 | 1 | 1 | 1 |
| C 441 | 096-01030-0000 | CAP TN 1UF 20V 10% | [EA] | 1 | 1 | 1 | 1 | 1 |
| C 442 | 096-01030-0005 | CAP TN 10UF 10%20V | [EA] | 1 | 1 | 1 | 1 | 1 |
| C 443 | 096-01030-0000 | CAP TN 1UF 20V 10% | [EA] | 1 | 1 | 1 | 1 | 1 |
| C 444 | 096-01030-0000 | CAP TN 1UF 20V 10% | [EA] | 1 | 1 | 1 | 1 | 1 |
| C 445 | 111-00001-0000 | CAP CR .01UF 50V | [EA] | 1 | 1 | 1 | 1 | 1 |
| C 446 | 111-00001-0000 | CAP CR .01UF 50V | [EA] | 1 | 1 | 1 | 1 | 1 |
| C 447 | 114-07104-0000 | CAP DC .1UF 16V | [EA] | 1 | 1 | 1 | 1 | 1 |
| C 448 | 113-05391-0000 | CAP DC 390PF 500V | [EA] | 1 | 1 | 1 | 1 | 1 |
| C 449 | 096-01030-0006 | CAP TN 47UF 10%15V | [EA] | 1 | 1 | 1 | 1 | 1 |
| C 450 | 113-03270-0000 | CAP DC 27PF 500V | [EA] | 1 | 1 | 1 | 1 | 1 |
| C 451 | 111-00001-0093 | CAP CR.1UF200V20% | [EA] | 1 | 1 | 1 | 1 | 1 |
| C 452 | 111-00009-0001 | CAP CR .01UF 10% | [EA] | 1 | 1 | 1 | 1 | 1 |
| C 453 | 113-05101-0000 | CAP DC 100PF 500V | [EA] | 1 | 1 | 1 | 1 | 1 |
| C 454 | 111-00009-0001 | CAP CR .01UF 10% | [EA] | 1 | 1 | 1 | 1 | 1 |
| C 455 | 113-05271-0000 | CAP DC 270PF 500V | [EA] | 1 | 1 | 1 | 1 | 1 |
| C 456 | 113-05101-0001 | CAP DC 100PF 500V | [EA] | | 1 | | | |
| C 456 | 113-05151-0001 | CAP DC 150PF 500V | [EA] | 1 | | 1 | 1 | 1 |
| C 457 | 111-00009-0001 | CAP CR .01UF 10% | [EA] | 1 | 1 | 1 | 1 | 1 |
| C 458 | 111-00009-0001 | CAP CR .01UF 10% | [EA] | | 1 | 1 | 1 | 1 |
| C 458 | 113-05101-0001 | CAP DC 100PF 500V | [EA] | 1 | | | | |
| C 459 | 111-00001-0000 | CAP CR .01UF 50V | [EA] | 1 | 1 | 1 | 1 | 1 |
| C 460 | 111-00001-0000 | CAP CR .01UF 50V | [EA] | 1 | 1 | 1 | 1 | 1 |
| C 461 | 104-00001-0001 | CAP SM 120PF 100V | [EA] | | | | 1 | 1 |
| C 461 | 113-03121-0000 | CAP DC 120PF 500V | [EA] | 1 | 1 | 1 | | |
| C 462 | 104-00001-0016 | CAP SM 220PF 100V | [EA] | | | | 1 | 1 |
| C 462 | 113-05391-0000 | CAP DC 390PF 500V | [EA] | 1 | 1 | 1 | | |
| C 463 | 111-00009-0001 | CAP CR .01UF 10% | [EA] | 1 | 1 | 1 | 1 | 1 |
| C 464 | 111-00001-0063 | CAP CR .022UF 200V | [EA] | 1 | 1 | 1 | 1 | 1 |
| C 465 | 111-00001-0063 | CAP CR .022UF 200V | [EA] | 1 | 1 | 1 | 1 | 1 |
| C 466 | 111-00009-0001 | CAP CR .01UF 10% | [EA] | 1 | 1 | 1 | | |
| C 467 | 111-00009-0001 | CAP CR .01UF 10% | [EA] | 1 | 1 | 1 | | |
| C 467 | 113-05331-0000 | CAP DC 330PF 500V | [EA] | | | | 1 | 1 |
| C 468 | 111-00009-0001 | CAP CR .01UF 10% | [EA] | | 1 | 1 | | |

| SYMBOL | PART NUMBER | DESCRIPTION | UM | QUANTITY | | | | |
|---|---|---|---|---|---|---|---|---|
| | | | | -0000 | -0010 | -0020 | -0030 | -0040 |
| C 468 | 113-05331-0000 | CAP DC 330PF 500V | [EA] | | | | 1 | 1 |
| C 469 | 111-00009-0001 | CAP CR .01UF 10% | [EA] | | 1 | 1 | | |
| C 469 | 113-05331-0000 | CAP DC 330PF 500V | [EA] | | | | 1 | 1 |
| C 470 | 113-05331-0000 | CAP DC 330PF 500V | [EA] | | | | 1 | 1 |
| C 470 | 113-05821-0000 | CAP DC 820PF 500V | [EA] | | 1 | | | |
| C 471 | 114-07104-0000 | CAP DC .1UF 16V | [EA] | | | 1 | 1 | 1 |
| C 472 | 114-07104-0000 | CAP DC .1UF 16V | [EA] | | | 1 | 1 | 1 |
| C 473 | 113-05331-0000 | CAP DC 330PF 500V | [EA] | | | | 1 | 1 |
| C 474 | 113-05331-0000 | CAP DC 330PF 500V | [EA] | | | | 1 | 1 |
| C 475 | 113-05331-0000 | CAP DC 330PF 500V | [EA] | | | | 1 | 1 |
| C 476 | 113-05331-0000 | CAP DC 330PF 500V | [EA] | | | | 1 | 1 |
| C 477 | 113-05331-0000 | CAP DC 330PF 500V | [EA] | | | | 1 | 1 |
| C 478 | 113-05331-0000 | CAP DC 330PF 500V | [EA] | | | | 1 | 1 |
| C 479 | 113-05331-0000 | CAP DC 330PF 500V | [EA] | | | | 1 | 1 |
| C 480 | 113-05331-0000 | CAP DC 330PF 500V | [EA] | | | | 1 | 1 |
| C 481 | 113-05331-0000 | CAP DC 330PF 500V | [EA] | | | | 1 | 1 |
| C 482 | 111-00001-0028 | CAP CR .47UF 50V | [EA] | | | | 1 | 1 |
| C 483 | 113-05331-0000 | CAP DC 330PF 500V | [EA] | | | | 1 | 1 |
| C 484 | 113-05331-0000 | CAP DC 330PF 500V | [EA] | | | | 1 | 1 |
| C 485 | 113-05331-0000 | CAP DC 330PF 500V | [EA] | | | | 1 | 1 |
| C 486 | 113-07503-0000 | CAP DC .05UF 12V | [EA] | | | | 1 | |
| C 486 | 118-00044-0000 | CAP DC .05UF | [EA] | | | | | 1 |
| C 487 | 111-00001-0028 | CAP CR .47UF 50V | [EA] | | | | 1 | 1 |
| C 488 | 111-00001-0028 | CAP CR .47UF 50V | [EA] | | | | 1 | 1 |
| C 489 | 097-00068-0001 | CAP AL 22UF 16V | [EA] | | | | 1 | 1 |
| C 490 | 113-05331-0000 | CAP DC 330PF 500V | [EA] | | | | 1 | 1 |
| C 491 | 114-05152-0000 | CAP DC 1500PF 500V | [EA] | | | | | 1 |
| C 492 | 113-03470-0000 | CAP DC 47PF 500V | [EA] | | | | | 1 |
| CJ 401 | 026-00018-0000 | WIRE CKTJMPR 22AWG | [EA] | 1 | 1 | 1 | 1 | 1 |
| CR 401 | 007-05037-0000 | DIO S MHVR20 | [EA] | 1 | 1 | 1 | 1 | 1 |
| CR 402 | 007-05037-0000 | DIO S MHVR20 | [EA] | 1 | 1 | 1 | 1 | 1 |
| CR 403 | 007-06045-0000 | DIO HC FH1100 | [EA] | 1 | 1 | 1 | 1 | 1 |
| CR 404 | 007-05011-0004 | DIO Z 13V 1W 5% | [EA] | 1 | 1 | 1 | 1 | 1 |
| CR 405 | 007-06016-0000 | DIO S 1N4154 | [EA] | 1 | 1 | 1 | 1 | |
| CR 405 | 007-06387-0000 | DIODE SCHOTTKY | [EA] | | | | | 1 |
| CR 406 | 007-06387-0000 | DIODE SCHOTTKY | [EA] | 1 | 1 | 1 | 1 | 1 |
| CR 407 | 007-05011-0000 | DIO Z 6.2V 1W 5% | [EA] | 1 | 1 | 1 | 1 | 1 |
| CR 408 | 007-06387-0000 | DIODE SCHOTTKY | [EA] | 1 | 1 | 1 | 1 | 1 |
| CR 409 | 007-06016-0000 | DIO S 1N4154 | [EA] | 1 | 1 | 1 | 1 | 1 |

| SYMBOL | PART NUMBER | DESCRIPTION | UM | QUANTITY | | | | |
|---|---|---|---|---|---|---|---|---|
| | | | | -0000 | -0010 | -0020 | -0030 | -0040 |
| CR 410 | 007-06016-0000 | DIO S 1N4154 | [EA] | 1 | 1 | 1 | 1 | 1 |
| CR 411 | 007-06016-0000 | DIO S 1N4154 | [EA] | 1 | 1 | 1 | 1 | 1 |
| CR 412 | 007-06016-0000 | DIO S 1N4154 | [EA] | 1 | 1 | 1 | 1 | 1 |
| CR 413 | 007-06023-0000 | DIO G 1N277 | [EA] | 1 | 1 | | | |
| CR 414 | 007-05011-0007 | DIO Z 5.1V 1W 5% | [EA] | 1 | 1 | 1 | 1 | 1 |
| CR 415 | 007-06016-0000 | DIO S 1N4154 | [EA] | 1 | 1 | 1 | 1 | 1 |
| CR 416 | 007-06025-0000 | DIO S 1N4003 | [EA] | | | 1 | 1 | 1 |
| CR 417 | 007-06046-0005 | DIO S 1N916A | [EA] | | | | 1 | 1 |
| CR 418 | 007-06046-0005 | DIO S 1N916A | [EA] | | | | 1 | 1 |
| CR 419 | 007-06046-0005 | DIO S 1N916A | [EA] | | | | 1 | 1 |
| CR 420 | 007-06016-0000 | DIO S 1N4154 | [EA] | | | | | 1 |
| CR 421 | 007-06016-0000 | DIO S 1N4154 | [EA] | | | | | 1 |
| CR 422 | 007-06016-0000 | DIO S 1N4154 | [EA] | | | | | 1 |
| CR 423 | 007-06016-0000 | DIO S 1N4154 | [EA] | | | | | 1 |
| CR 424 | 007-06016-0000 | DIO S 1N4154 | [EA] | | | | | 1 |
| CR 425 | 007-06016-0000 | DIO S 1N4154 | [EA] | | | | | 1 |
| CR 426 | 007-06016-0000 | DIO S 1N4154 | [EA] | | | | | 1 |
| CR 427 | 007-06016-0000 | DIO S 1N4154 | [EA] | | | | | 1 |
| CR 428 | 007-06016-0000 | DIO S 1N4154 | [EA] | | | | | 1 |
| CR 429 | 007-06016-0000 | DIO S 1N4154 | [EA] | | | | | 1 |
| CR 430 | 007-06016-0000 | DIO S 1N4154 | [EA] | | | | | 1 |
| CR 431 | 007-06016-0000 | DIO S 1N4154 | [EA] | | | | | 1 |
| F 401 | 036-00058-0002 | FUSE AGA 32V 2A | [EA] | | 1 | 1 | 1 | 1 |
| I 401 | 120-03002-0002 | IC LM710H | [EA] | 1 | 1 | 1 | 1 | 1 |
| I 402 | 120-00034-0000 | IC SN74121N | [EA] | 1 | 1 | 1 | 1 | 1 |
| I 403 | 120-00034-0000 | IC SN74121N | [EA] | 1 | 1 | 1 | 1 | 1 |
| I 404 | 120-00054-0002 | IC SN7416N | [EA] | 1 | 1 | 1 | 1 | 1 |
| I 405 | 120-08005-0000 | TRANSPONDER LSI | [EA] | 1 | 1 | 1 | 1 | 1 |
| I 406 | 120-00050-0006 | IC 9316PC | [EA] | 1 | 1 | 1 | 1 | 1 |
| J 401 | 030-00045-0000 | CONN COAX | [EA] | 1 | 1 | 1 | 1 | 1 |
| L 401 | 019-02102-0001 | CHOKE 60UH | [EA] | 1 | 1 | 1 | 1 | 1 |
| L 402 | 019-02055-0006 | CH RF .15UH 10% | [EA] | 1 | 1 | 1 | 1 | 1 |
| L 403 | 019-02055-0021 | CH RF 2.7UH 10% | [EA] | 1 | 1 | 1 | 1 | 1 |
| L 404 | 019-02055-0021 | CH RF 2.7UH 10% | [EA] | 1 | 1 | 1 | 1 | 1 |
| L 405 | 019-02102-0002 | CHOKE 50UH | [EA] | 1 | 1 | 1 | 1 | 1 |
| L 406 | 019-02055-0016 | CH RF 1UH 10% | [EA] | 1 | 1 | 1 | 1 | 1 |
| L 407 | 013-00028-0001 | FERR BEAD W/LEAD | [EA] | | | | 1 | 1 |
| L 408 | 013-00028-0001 | FERR BEAD W/LEAD | [EA] | | | | 1 | 1 |
| L 409 | 013-00028-0001 | FERR BEAD W/LEAD | [EA] | | | | 1 | 1 |

| SYMBOL | PART NUMBER | DESCRIPTION | UM | QUANTITY | | | | |
|---|---|---|---|---|---|---|---|---|
| | | | | -0000 | -0010 | -0020 | -0030 | -0040 |
| L 410 | 013-00028-0001 | FERR BEAD W/LEAD | [EA] | | | | 1 | 1 |
| L 411 | 013-00028-0001 | FERR BEAD W/LEAD | [EA] | | | | 1 | 1 |
| L 412 | 013-00028-0001 | FERR BEAD W/LEAD | [EA] | | | | 1 | 1 |
| L 413 | 013-00028-0001 | FERR BEAD W/LEAD | [EA] | | | | 1 | 1 |
| L 414 | 013-00028-0001 | FERR BEAD W/LEAD | [EA] | | | | 1 | 1 |
| L 415 | 013-00028-0001 | FERR BEAD W/LEAD | [EA] | | | | 1 | 1 |
| L 416 | 019-02084-0037 | CH 4.7UH 10% | [EA] | | | | 1 | 1 |
| L 417 | 019-02084-0037 | CH 4.7UH 10% | [EA] | | | | 1 | 1 |
| L 418 | 019-02084-0057 | CH 33UH 10% | [EA] | | | | 1 | 1 |
| L 419 | 019-02084-0057 | CH 33UH 10% | [EA] | | | | 1 | 1 |
| L 420 | 019-02084-0057 | CH 33UH 10% | [EA] | | | | 1 | 1 |
| Q 401 | 007-00930-0000 | XSTR S PNPMJE15029 | [EA] | 1 | 1 | 1 | 1 | 1 |
| Q 402 | 007-00930-0000 | XSTR S PNPMJE15029 | [EA] | 1 | 1 | 1 | 1 | 1 |
| Q 403 | 007-00035-0000 | XSTR S NPN 2N3415 | [EA] | 1 | 1 | 1 | 1 | 1 |
| Q 404 | 007-00237-0000 | XSTR S NPN SPS6797 | [EA] | 1 | 1 | 1 | 1 | 1 |
| Q 405 | 007-00237-0000 | XSTR S NPN SPS6797 | [EA] | 1 | 1 | 1 | 1 | 1 |
| Q 406 | 007-00237-0000 | XSTR S NPN SPS6797 | [EA] | 1 | 1 | 1 | 1 | 1 |
| Q 407 | 007-00237-0000 | XSTR S NPN SPS6797 | [EA] | 1 | 1 | 1 | 1 | 1 |
| Q 408 | 007-00174-0000 | XSTR S PNP 2N5086 | [EA] | 1 | 1 | 1 | 1 | 1 |
| Q 409 | 007-00174-0000 | XSTR S PNP 2N5086 | [EA] | 1 | 1 | 1 | 1 | 1 |
| Q 410 | 007-00162-0000 | XSTR S NPN MPS6515 | [EA] | 1 | 1 | 1 | 1 | 1 |
| Q 411 | 007-00195-0000 | XSTR S MPSH10 | [EA] | 1 | 1 | 1 | 1 | 1 |
| Q 412 | 007-00174-0000 | XSTR S PNP 2N5086 | [EA] | 1 | 1 | 1 | 1 | 1 |
| Q 413 | 007-00035-0000 | XSTR S NPN 2N3415 | [EA] | 1 | 1 | 1 | 1 | 1 |
| Q 414 | 007-00187-0000 | XSTR S NPN 2N5089 | [EA] | 1 | 1 | 1 | 1 | 1 |
| Q 415 | 007-00206-0003 | XSTR MJE1100 | [EA] | 1 | 1 | 1 | 1 | 1 |
| Q 416 | 007-00035-0000 | XSTR S NPN 2N3415 | [EA] | 1 | 1 | 1 | 1 | 1 |
| Q 417 | 007-00035-0000 | XSTR S NPN 2N3415 | [EA] | 1 | 1 | | | |
| Q 417 | 007-00161-0000 | XSTR S PNP MPSA56 | [EA] | | | 1 | 1 | 1 |
| Q 418 | 007-00035-0000 | XSTR S NPN 2N3415 | [EA] | 1 | 1 | | | |
| Q 418 | 007-00161-0000 | XSTR S PNP MPSA56 | [EA] | | | 1 | 1 | 1 |
| Q 419 | 007-00198-0001 | XSTR S 67121 | [EA] | 1 | 1 | 1 | 1 | 1 |
| Q 420 | 007-00113-0000 | XSTR NPN 2N3646 | [EA] | 1 | 1 | 1 | 1 | 1 |
| Q 421 | 007-00238-0000 | XSTR S PNP FPN4917 | [EA] | 1 | 1 | 1 | 1 | 1 |
| Q 422 | 007-00113-0000 | XSTR NPN 2N3646 | [EA] | 1 | 1 | 1 | 1 | 1 |
| R 401 | 131-00156-0033 | RES CF 15M HW 10% | [EA] | 1 | 1 | 1 | 1 | 1 |
| R 402 | 131-00270-0023 | RES CF 27 QW 5% | [EA] | 1 | 1 | | | |
| R 402 | 131-00270-0033 | RES CF 27 HW 5% | [EA] | | | 1 | 1 | 1 |
| R 403 | 131-00470-0023 | RES CF 47 QW 5% | [EA] | 1 | 1 | 1 | 1 | 1 |

| SYMBOL | PART NUMBER | DESCRIPTION | UM | QUANTITY | | | | |
|---|---|---|---|---|---|---|---|---|
| | | | | -0000 | -0010 | -0020 | -0030 | -0040 |
| R 404 | 131-00470-0023 | RES CF 47 QW 5% | [EA] | | | 1 | 1 | 1 |
| R 404 | 131-00560-0023 | RES CF 56 QW 5% | [EA] | 1 | 1 | | | |
| R 405 | 131-00561-0023 | RES CF 560 QW 5% | [EA] | 1 | 1 | | | |
| R 406 | 131-00331-0023 | RES CF 330 QW 5% | [EA] | 1 | 1 | 1 | 1 | 1 |
| R 407 | 131-00681-0023 | RES CF 680 QW 5% | [EA] | 1 | 1 | 1 | 1 | 1 |
| R 408 | 131-00271-0023 | RES CF 270 QW 5% | [EA] | 1 | 1 | 1 | 1 | 1 |
| R 409 | 131-00101-0023 | RES CF 100 QW 5% | [EA] | 1 | 1 | 1 | 1 | 1 |
| R 410 | 131-00100-0023 | RES CF 10 QW 5% | [EA] | 1 | | 1 | 1 | 1 |
| R 410 | 131-00101-0023 | RES CF 100 QW 5% | [EA] | | 1 | | | |
| R 4100 | 131-00103-0033 | RES CF 10K HW 5% | [EA] | | | | 1 | 1 |
| R 4101 | 131-00104-0013 | RES CF 100K EW 5% | [EA] | | | | 1 | 1 |
| R 4102 | 131-00471-0013 | RES CF 470 EW 5% | [EA] | | | | 1 | 1 |
| R 4103 | 133-00113-0016 | RES VA 5K 20% A | [EA] | | | | 1 | 1 |
| R 411 | 131-00101-0023 | RES CF 100 QW 5% | [EA] | 1 | 1 | 1 | 1 | 1 |
| R 412 | 131-00272-0023 | RES CF 2.7K QW 5% | [EA] | 1 | 1 | 1 | 1 | 1 |
| R 413 | 131-00361-0023 | RES CF 360 QW 5% | [EA] | 1 | 1 | 1 | 1 | 1 |
| R 414 | 131-00392-0023 | RES CF 3.9K QW 5% | [EA] | 1 | 1 | 1 | 1 | |
| R 414 | 131-00822-0023 | RES CF 8.2K QW 5% | [EA] | | | | | 1 |
| R 415 | 131-00102-0023 | RES CF 1K QW 5% | [EA] | | | | | 1 |
| R 415 | 131-00561-0023 | RES CF 560 QW 5% | [EA] | 1 | 1 | 1 | 1 | |
| R 416 | 131-00100-0023 | RES CF 10 QW 5% | [EA] | 1 | 1 | 1 | 1 | 1 |
| R 417 | 131-00202-0023 | RES CF 2K QW 5% | [EA] | 1 | 1 | 1 | 1 | 1 |
| R 418 | 131-00361-0023 | RES CF 360 QW 5% | [EA] | 1 | 1 | 1 | 1 | 1 |
| R 419 | 131-00822-0023 | RES CF 8.2K QW 5% | [EA] | 1 | 1 | 1 | 1 | 1 |
| R 420 | 131-00122-0023 | RES CF 1.2K QW 5% | [EA] | 1 | 1 | 1 | 1 | 1 |
| R 421 | 131-00100-0023 | RES CF 10 QW 5% | [EA] | 1 | 1 | 1 | 1 | 1 |
| R 422 | 131-00202-0023 | RES CF 2K QW 5% | [EA] | 1 | 1 | 1 | 1 | 1 |
| R 423 | 131-00361-0023 | RES CF 360 QW 5% | [EA] | 1 | 1 | 1 | 1 | 1 |
| R 424 | 131-00512-0023 | RES CF 5.1K QW 5% | [EA] | 1 | 1 | 1 | 1 | 1 |
| R 425 | 131-00681-0023 | RES CF 680 QW 5% | [EA] | 1 | | 1 | 1 | 1 |
| R 425 | 131-00751-0023 | RES CF 750 QW 5% | [EA] | | 1 | | | |
| R 426 | 131-00202-0023 | RES CF 2K QW 5% | [EA] | 1 | 1 | 1 | 1 | 1 |
| R 427 | 130-00560-0025 | RES FC 56 QW 10% | [EA] | | 1 | | | |
| R 427 | 131-00560-0023 | RES CF 56 QW 5% | [EA] | 1 | | 1 | 1 | 1 |
| R 428 | 131-00152-0023 | RES CF 1.5K QW 5% | [EA] | 1 | 1 | 1 | 1 | 1 |
| R 429 | 131-00101-0023 | RES CF 100 QW 5% | [EA] | 1 | | 1 | 1 | 1 |
| R 429 | 131-00242-0023 | RES CF 2.4K QW 5% | [EA] | | 1 | | | |
| R 430 | 131-00162-0023 | RES CF 1.6K QW 5% | [EA] | 1 | 1 | 1 | 1 | 1 |
| R 431 | 131-00242-0023 | RES CF 2.4K QW 5% | [EA] | 1 | 1 | 1 | 1 | 1 |

| SYMBOL | PART NUMBER | DESCRIPTION | UM | QUANTITY | | | | |
|---|---|---|---|---|---|---|---|---|
| | | | | -0000 | -0010 | -0020 | -0030 | -0040 |
| R 432 | 131-00273-0023 | RES CF 27K QW 5% | [EA] | 1 | 1 | 1 | 1 | 1 |
| R 433 | 131-00912-0023 | RES CF 9.1K QW 5% | [EA] | 1 | 1 | 1 | 1 | 1 |
| R 434 | 131-00622-0023 | RES CF 6.2K QW 5% | [EA] | 1 | 1 | 1 | 1 | 1 |
| R 435 | 131-00152-0023 | RES CF 1.5K QW 5% | [EA] | 1 | 1 | 1 | 1 | 1 |
| R 436 | 131-00510-0023 | RES CF 51 QW 5% | [EA] | 1 | 1 | 1 | 1 | |
| R 436 | 136-00562-0072 | RES PF 56.2 QW 1% | [EA] | | | | | 1 |
| R 437 | 131-00222-0023 | RES CF 2.2K QW 5% | [EA] | 1 | 1 | 1 | 1 | 1 |
| R 438 | 131-00471-0023 | RES CF 470 QW 5% | [EA] | 1 | 1 | 1 | 1 | 1 |
| R 439 | 131-00222-0023 | RES CF 2.2K QW 5% | [EA] | 1 | 1 | 1 | 1 | 1 |
| R 440 | 131-00471-0013 | RES CF 470 EW 5% | [EA] | | | | 1 | 1 |
| R 441 | 131-00151-0023 | RES CF 150 QW 5% | [EA] | 1 | 1 | 1 | 1 | 1 |
| R 442 | 131-00102-0023 | RES CF 1K QW 5% | [EA] | 1 | 1 | | | |
| R 442 | 136-08060-0072 | RES PF 806 QW 1% | [EA] | | | 1 | 1 | 1 |
| R 443 | 131-00131-0023 | RES CF 130 QW 5% | [EA] | 1 | 1 | 1 | 1 | 1 |
| R 444 | 131-00223-0023 | RES CF 22K QW 5% | [EA] | 1 | | 1 | 1 | 1 |
| R 444 | 131-00273-0023 | RES CF 27K QW 5% | [EA] | | 1 | | | |
| R 445 | 131-00103-0023 | RES CF 10K QW 5% | [EA] | 1 | 1 | 1 | | |
| R 445 | 131-00682-0023 | RES CF 6.8K QW 5% | [EA] | | | | 1 | 1 |
| R 446 | 131-00471-0023 | RES CF 470 QW 5% | [EA] | 1 | 1 | 1 | 1 | 1 |
| R 447 | 131-00471-0023 | RES CF 470 QW 5% | [EA] | 1 | 1 | 1 | 1 | 1 |
| R 448 | 131-00222-0023 | RES CF 2.2K QW 5% | [EA] | 1 | 1 | 1 | 1 | 1 |
| R 449 | 131-00221-0023 | RES CF 220 QW 5% | [EA] | 1 | 1 | 1 | 1 | 1 |
| R 450 | 131-00222-0023 | RES CF 2.2K QW 5% | [EA] | 1 | 1 | 1 | 1 | 1 |
| R 451 | 131-00222-0023 | RES CF 2.2K QW 5% | [EA] | 1 | 1 | 1 | 1 | 1 |
| R 452 | 131-00332-0023 | RES CF 3.3K QW 5% | [EA] | 1 | 1 | 1 | 1 | 1 |
| R 453 | 131-00101-0023 | RES CF 100 QW 5% | [EA] | 1 | 1 | 1 | 1 | 1 |
| R 454 | 131-00622-0023 | RES CF 6.2K QW 5% | [EA] | 1 | 1 | 1 | 1 | 1 |
| R 455 | 131-00202-0023 | RES CF 2K QW 5% | [EA] | 1 | 1 | 1 | 1 | 1 |
| R 456 | 131-00122-0023 | RES CF 1.2K QW 5% | [EA] | 1 | 1 | 1 | 1 | 1 |
| R 457 | 131-00751-0023 | RES CF 750 QW 5% | [EA] | 1 | 1 | 1 | 1 | 1 |
| R 458 | 132-05045-0000 | RES WW 18 2W 5% | [EA] | 1 | 1 | 1 | 1 | 1 |
| R 459 | 131-00332-0023 | RES CF 3.3K QW 5% | [EA] | 1 | 1 | | | |
| R 459 | 136-03241-0072 | RES PF 3.24K QW 1% | [EA] | | | 1 | 1 | 1 |
| R 460 | 133-00016-0002 | RES VA 1K .1W 20% | [EA] | 1 | 1 | | | |
| R 460 | 133-00016-0005 | RES VA 500 .1W 20% | [EA] | | | 1 | | |
| R 460 | 133-00113-0010 | RES VA 500 20% A | [EA] | | | | 1 | 1 |
| R 461 | 131-00470-0023 | RES CF 47 QW 5% | [EA] | 1 | 1 | 1 | 1 | 1 |
| R 462 | 131-00912-0023 | RES CF 9.1K QW 5% | [EA] | 1 | 1 | 1 | 1 | |
| R 462 | 136-01002-0072 | RES PF 10K QW 1% | [EA] | | | | | 1 |

| SYMBOL | PART NUMBER | DESCRIPTION | UM | QUANTITY | | | | |
|---|---|---|---|---|---|---|---|---|
| | | | | -0000 | -0010 | -0020 | -0030 | -0040 |
| R 463 | 131-00510-0023 | RES CF 51 QW 5% | [EA] | 1 | 1 | 1 | 1 | 1 |
| R 464 | 131-00272-0023 | RES CF 2.7K QW 5% | [EA] | 1 | 1 | 1 | 1 | 1 |
| R 465 | 131-00622-0023 | RES CF 6.2K QW 5% | [EA] | 1 | 1 | 1 | 1 | 1 |
| R 466 | 131-00471-0023 | RES CF 470 QW 5% | [EA] | 1 | 1 | 1 | 1 | 1 |
| R 467 | 131-00512-0023 | RES CF 5.1K QW 5% | [EA] | 1 | 1 | 1 | 1 | 1 |
| R 468 | 131-00471-0023 | RES CF 470 QW 5% | [EA] | 1 | 1 | 1 | 1 | 1 |
| R 469 | 131-00472-0023 | RES CF 4.7K QW 5% | [EA] | 1 | 1 | 1 | 1 | 1 |
| R 470 | 131-00471-0023 | RES CF 470 QW 5% | [EA] | 1 | 1 | 1 | 1 | 1 |
| R 471 | 131-00200-0023 | RES CF 20 QW 5% | [EA] | 1 | 1 | 1 | | |
| R 472 | 133-00016-0003 | RES VA 10K .1W 20% | [EA] | 1 | 1 | 1 | | |
| R 472 | 133-00143-0015 | RES VA 10K 20% | [EA] | | | | 1 | 1 |
| R 473 | 131-00471-0023 | RES CF 470 QW 5% | [EA] | 1 | 1 | | | |
| R 473 | 131-00472-0023 | RES CF 4.7K QW 5% | [EA] | | | 1 | 1 | 1 |
| R 474 | 131-00471-0023 | RES CF 470 QW 5% | [EA] | 1 | 1 | | | |
| R 474 | 131-00472-0023 | RES CF 4.7K QW 5% | [EA] | | | 1 | 1 | 1 |
| R 475 | 131-00220-0023 | RES CF 22 QW 5% | [EA] | | | 1 | 1 | 1 |
| R 475 | 131-00470-0023 | RES CF 47 QW 5% | [EA] | 1 | 1 | | | |
| R 476 | 131-00103-0023 | RES CF 10K QW 5% | [EA] | 1 | 1 | 1 | 1 | 1 |
| R 477 | 132-05022-0000 | RES WW 5.6 2W 5% | [EA] | 1 | 1 | 1 | 1 | 1 |
| R 478 | 131-00560-0023 | RES CF 56 QW 5% | [EA] | | | 1 | 1 | 1 |
| R 478 | 131-00680-0023 | RES CF 68 QW 5% | [EA] | 1 | 1 | | | |
| R 479 | 131-00103-0023 | RES CF 10K QW 5% | [EA] | | | 1 | | |
| R 479 | 131-00471-0023 | RES CF 470 QW 5% | [EA] | 1 | 1 | | 1 | 1 |
| R 480 | 131-00103-0023 | RES CF 10K QW 5% | [EA] | 1 | 1 | 1 | 1 | 1 |
| R 481 | 131-00133-0023 | RES CF 13K QW 5% | [EA] | | | | 1 | 1 |
| R 481 | 131-00272-0023 | RES CF 2.7K QW 5% | [EA] | 1 | 1 | 1 | | |
| R 482 | 131-00392-0023 | RES CF 3.9K QW 5% | [EA] | | | | 1 | 1 |
| R 482 | 131-00821-0023 | RES CF 820 QW 5% | [EA] | 1 | 1 | 1 | | |
| R 483 | 131-00470-0023 | RES CF 47 QW 5% | [EA] | 1 | 1 | 1 | 1 | 1 |
| R 484 | 131-00181-0023 | RES CF 180 QW 5% | [EA] | 1 | 1 | 1 | 1 | 1 |
| R 485 | 131-00471-0023 | RES CF 470 QW 5% | [EA] | 1 | 1 | 1 | 1 | 1 |
| R 486 | 130-00103-0023 | RES FC 10K QW 5% | [EA] | | | 1 | | |
| R 486 | 131-00103-0023 | RES CF 10K QW 5% | [EA] | 1 | 1 | | 1 | 1 |
| R 487 | 132-05006-0000 | RES WW 47 2W 10% | [EA] | 1 | 1 | 1 | 1 | 1 |
| R 488 | 131-00152-0023 | RES CF 1.5K QW 5% | [EA] | | | 1 | 1 | 1 |
| R 489 | 131-00821-0023 | RES CF 820 QW 5% | [EA] | | | 1 | 1 | 1 |
| R 490 | 131-00104-0023 | RES CF 100K QW 5% | [EA] | | | 1 | | |
| R 490 | 131-00471-0013 | RES CF 470 EW 5% | [EA] | | | | 1 | 1 |
| R 491 | 131-00102-0023 | RES CF 1K QW 5% | [EA] | | | 1 | | |

| SYMBOL | PART NUMBER | DESCRIPTION | UM | QUANTITY | | | | |
|---|---|---|---|---|---|---|---|---|
| | | | | -0000 | -0010 | -0020 | -0030 | -0040 |
| R 491 | 131-00471-0013 | RES CF 470 EW 5% | [EA] | | | | 1 | 1 |
| R 492 | 131-00471-0013 | RES CF 470 EW 5% | [EA] | | | | 1 | 1 |
| R 493 | 131-00471-0013 | RES CF 470 EW 5% | [EA] | | | | 1 | 1 |
| R 494 | 131-00471-0013 | RES CF 470 EW 5% | [EA] | | | | 1 | 1 |
| R 495 | 131-00471-0013 | RES CF 470 EW 5% | [EA] | | | | 1 | 1 |
| R 496 | 131-00471-0013 | RES CF 470 EW 5% | [EA] | | | | 1 | 1 |
| R 497 | 131-00471-0013 | RES CF 470 EW 5% | [EA] | | | | 1 | 1 |
| R 498 | 131-00471-0013 | RES CF 470 EW 5% | [EA] | | | | 1 | 1 |
| R 499 | 131-00471-0013 | RES CF 470 EW 5% | [EA] | | | | 1 | 1 |
| RM 401 | 015-00045-0001 | 15 PIN RESISTOR / CAPACITOR | [EA] | 1 | 1 | 1 | 1 | 1 |
| RM 402 | 015-00045-0001 | 15 PIN RESISTOR / CAPACITOR | [EA] | 1 | 1 | 1 | 1 | 1 |
| T 401 | 019-07042-0001 | XFMR IVRTR | [EA] | 1 | | | 1 | 1 |
| T 401 | 019-07065-0000 | XFMR_PWR INVRTR | [EA] | | 1 | | | |
| T 401 | 050-01686-0000 | CONV XFMR KIT | [EA] | | | 1 | | |
| T 402 | 019-08032-0000 | XFMR IF | [EA] | 1 | 1 | 1 | 1 | 1 |
| T 403 | 019-08032-0000 | XFMR IF | [EA] | 1 | 1 | 1 | 1 | 1 |
| T 404 | 019-08032-0000 | XFMR IF | [EA] | 1 | 1 | 1 | 1 | 1 |
| T 405 | 019-08032-0000 | XFMR IF | [EA] | 1 | 1 | 1 | 1 | 1 |
| TP 401 | 008-00048-0000 | SLDRLS PIN RECPT | [EA] | | | | | 1 |
| TP 403 | 008-00048-0000 | SLDRLS PIN RECPT | [EA] | | | | | 1 |
| TP 404 | 008-00048-0000 | SLDRLS PIN RECPT | [EA] | | | | | 1 |
| Y 401 | 044-00064-0000 | XTAL 22.069MHZ | [EA] | 1 | 1 | 1 | 1 | 1 |
| REF 1 | 300-05824-0000 | MAIN BD | [RF] | X | X | | | |
| REF 1 | 300-05824-0020 | MAIN BD | [RF] | | | X | | |
| REF 1 | 300-05824-0030 | MAIN BD | [RF] | | | | X | |
| REF 1 | 300-05824-0040 | MAIN BD | [RF] | | | | | X |

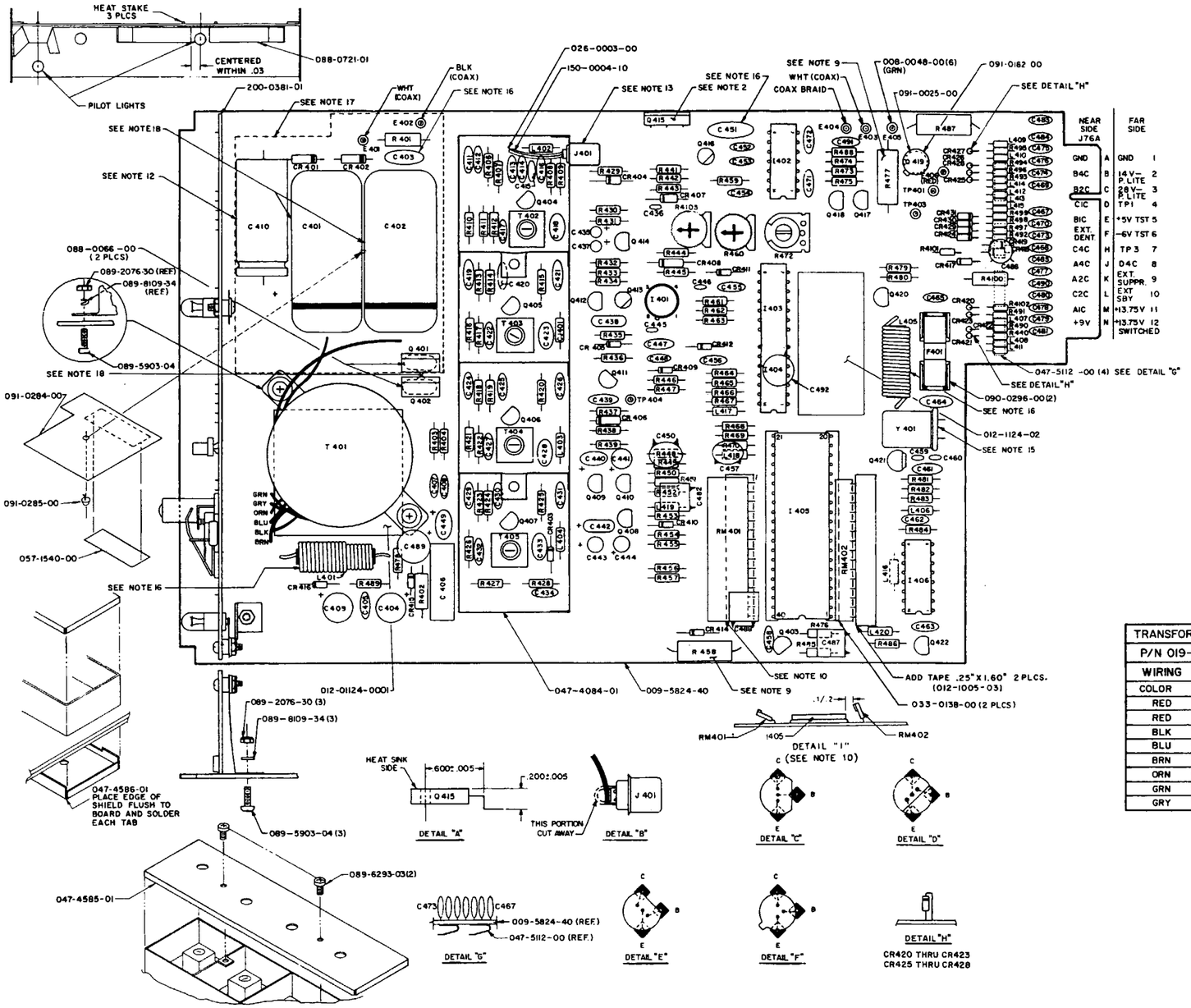


NOTES:

1. ALL COMPONENTS TO BE MOUNTED AS CLOSE TO BOARD AS POSSIBLE, UNLESS OTHERWISE NOTED.
2. Q 415, SEE DETAIL "A". .04 MIN. CLEARANCE BETWEEN TRANS. LEADS AND BOARD SURFACE.
3. Q 408, Q 409, Q 410, Q 412, Q 414, Q 417, Q 418, Q 420, Q 421, Q 422, SEE DETAIL "C".
4. Q 403, Q 413, Q 416, SEE DETAIL "D".
5. Q 404, THRU Q 407, AND Q 411, SEE DETAIL "E".
6. Q 419 SEE DETAIL "F".
7. OMIT
8. OMIT
9. R458, R477, AND R487, TO BE SPACED .05 MIN OFF BOARD SURFACE, WITH R458 AND R487 BENT TOWARD TO THE EDGE OF THE BOARD.
10. RM401 TO BE BEND OVER, AS SHOWN ON BOARD, MAX. HEIGHT .200 INCHES ABOVE BOARD. RM402 IS TO BEND OVER TOWARD 1405. THE CLEARANCE BETWEEN U5 AND RM402 SHOULD BE BETWEEN .1 TO .2 INCHES (SEE DETAIL "I").
11. BEND C 450 AND C 457 OVER RESISTORS AS SHOWN.
12. C 410 MUST BE AT LEAST .700 INCHES FROM FRONT EDGE OF BOARD, FOR SWITCH BOARD SHAFT CLEARANCE.
13. J 401 TO BE SWAGED AND SOLDERED IN PLACE. ALSO SEE DETAIL "B".
14. I. F. FENCE 047-4084-01 SHOULD HAVE A CONTINUOUS SOLDER SEAM AROUND OUTER EDGE TO P.C. BOARD.
15. APPLY DOUBLE SIDED TAPE (P/N 016-1124-00) TO SECURE CRYSTAL TO P.C. BOARD.
16. APPLY R.T.V. TO COMPONENTS TO SECURE TO BOARD WHERE NOTED, USE KPN 016-1082-00.
17. SPRAY BOTH SIDES OF BOARD WITH 016-1040-00 IN THIS AREA BEING CAREFUL NOT TO SPRAY THE SWITCH BOARD CONTACTS AND E 401, E 402.
18. APPLY R.T.V.(016-1082-00) BETWEEN C401 & C402 AND BETWEEN Q401 & Q402 TO SECURE PAIRS TOGETHER FOR ADDED STABILITY.
19. LEAVE FLUX INTACT ON ALL SOLDER CONNECTIONS ON SWITCH BOARD (031-0175-00). DO NOT ALLOW SOLVENT TO COME IN CONTACT WITH SWITCH BOARD. DO NOT ATTEMPT TO CLEAN CONTACT SURFACES OR ROTORS OF SWITCHES.

| TRANSFORMER T401 | |
|---|---|
| P/N 019-7042-01 | |
| WIRING | CHART |
| COLOR | LENGTH |
| RED | 1.75 IN. |
| RED | 2.25 IN. |
| BLK | 1.50 IN. |
| BLU | |
| BRN | |
| ORN | |
| GRN | |
| GRY | |

**FIGURE 6-11 KT 76A Main Board (S/N 40,000 - 109,999)**
**(Dwg. No. 300-05824-0040 R-9)**

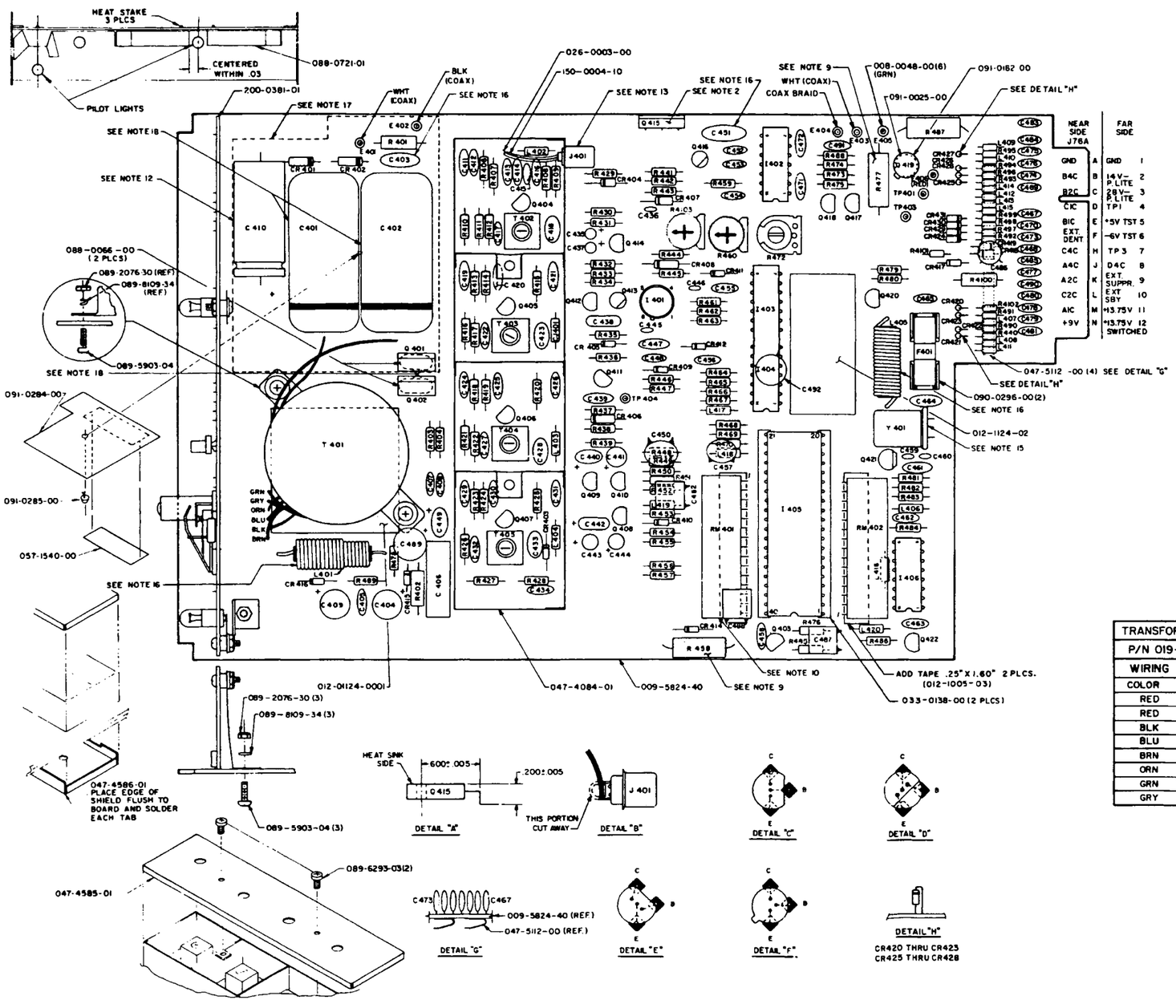


NOTES:

1. ALL COMPONENTS TO BE MOUNTED AS CLOSE TO BOARD AS POSSIBLE, UNLESS OTHERWISE NOTED.
2. Q 415, SEE DETAIL "A". .04 MIN. CLEARANCE BETWEEN TRANS. LEADS AND BOARD SURFACE.
3. Q 408, Q 409, Q 410, Q 412, Q 414, Q 417, Q 418, Q 420, Q 421, Q 422, SEE DETAIL "C".
4. Q 403, Q 413, Q 416, SEE DETAIL "D".
5. Q 404, THRU Q 407, AND Q 411, SEE DETAIL "E".
6. Q 419 SEE DETAIL "F".
7. ~~R 472 MUST BE LAID FLAT TO ALLOW FOR ADJUSTMENT. FOLD OVER AFTER WAVE SOLDERING AND RETAIN WITH R.T.V. (USE PREFORM TOOL NO. 943, TEMPLATE "J").~~
8. ~~R 460 SHOULD LAY FLAT ON BOARD SURFACE, RETAIN WITH R.T.V.~~
9. R 458, R 477, AND R 487, TO BE SPACED .05 MIN. OFF BOARD SURFACE, WITH R 458 AND R 487 BENT TOWARD THE EDGE OF THE BOARD.
10. RM 401 AND RM 402 TO BE BENT OVER, AS SHOWN ON BOARD, MAXIMUM HEIGHT .200 INCHES ABOVE BOARD.
11. BEND C 450 AND C 457 OVER RESISTORS AS SHOWN.
12. C 410 MUST BE AT LEAST .700 INCHES FROM FRONT EDGE OF BOARD, FOR SWITCH BOARD SHAFT CLEARANCE.
13. J 401 TO BE SWAGED AND SOLDERED IN PLACE. ALSO SEE DETAIL "B".
14. I.F. FENCE 047-4084-01 SHOULD HAVE A CONTINUOUS SOLDER SEAM AROUND OUTER EDGE TO P.C. BOARD.
15. APPLY DOUBLE SIDED TAPE (P/N 016-1124-00) TO SECURE CRYSTAL TO P.C. BOARD.
16. APPLY R.T.V. TO COMPONENTS TO SECURE TO BOARD WHERE NOTED, USE KPN 016-1082-00.
17. SPRAY BOTH SIDES OF BOARD WITH 016-1040-00 IN THIS AREA BEING CAREFUL NOT TO SPRAY THE SWITCH BOARD CONTACTS AND E 401, E 402.
18. APPLY R.T.V. (016-1082-00) BETWEEN C401 & C402 AND BETWEEN Q401 & Q402 TO SECURE PAIRS TOGETHER FOR ADDED STABILITY.
19. LEAVE FLUX INTACT ON ALL SOLDER CONNECTIONS ON SWITCH BOARD (031-0175-00). DO NOT ALLOW SOLVENT TO COME IN CONTACT WITH SWITCH BOARD. DO NOT ATTEMPT TO CLEAN CONTACT SURFACES OR ROTORS OF SWITCHES.

| TRANSFORMER T 401 | |
|---|---|
| P/N 019-7042-01 | |
| WIRING | CHART |
| COLOR | LENGTH |
| RED | 1.75 IN. |
| RED | 2.25 IN. |
| BLK | 1.50 IN. |
| BLU | |
| BRN | |
| ORN | |
| GRN | |
| GRY | |

**FIGURE 6-11A KT 76A Main Board (S/N 40,000 - 109,999)**
**(Dwg. No. 300-05824-0040 R-8)**

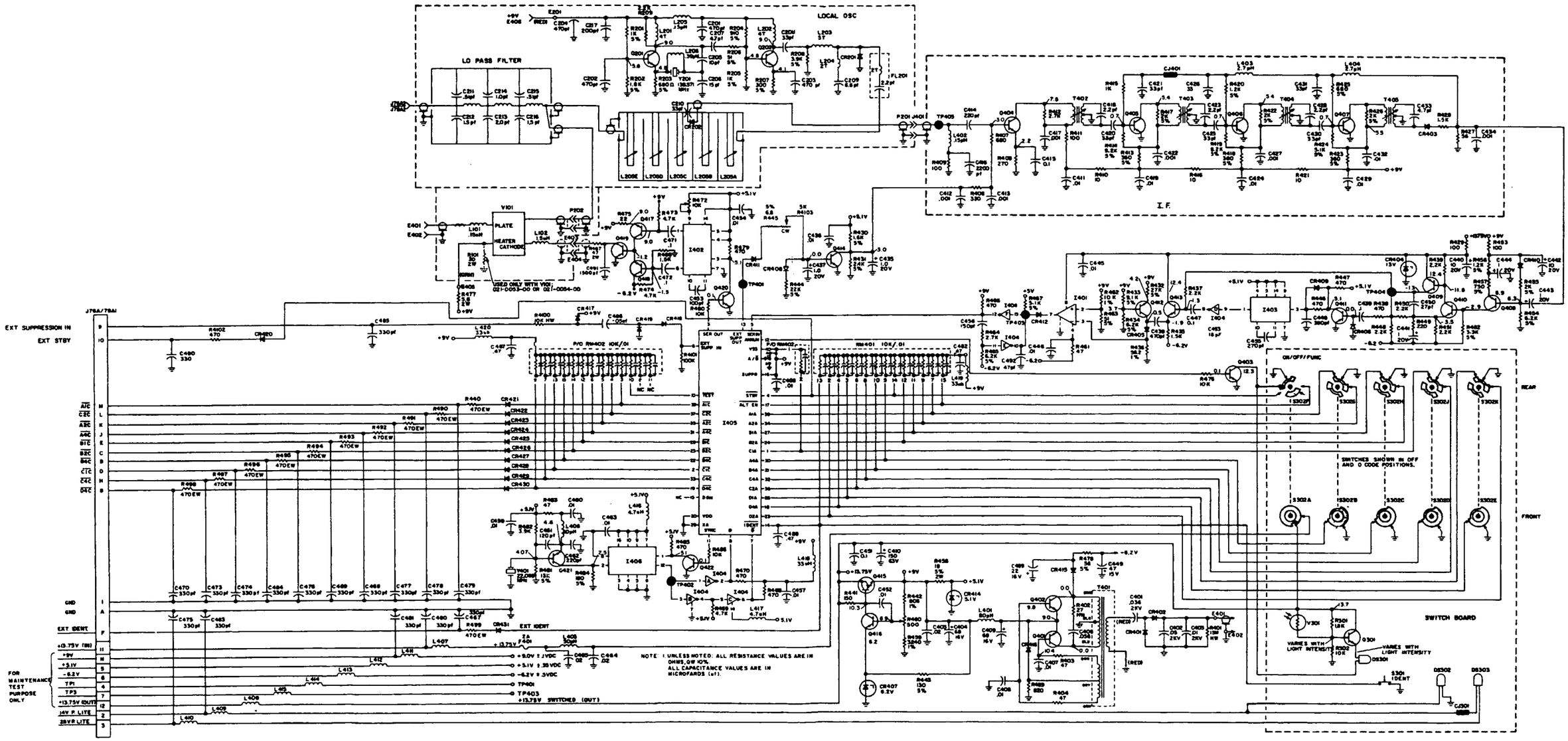


**FIGURE 6-12 KT 76A Main Board Schematic (S/N 40,000 - 109,999)**
**(Dwg. No. 002-00449-0040 R-9)**

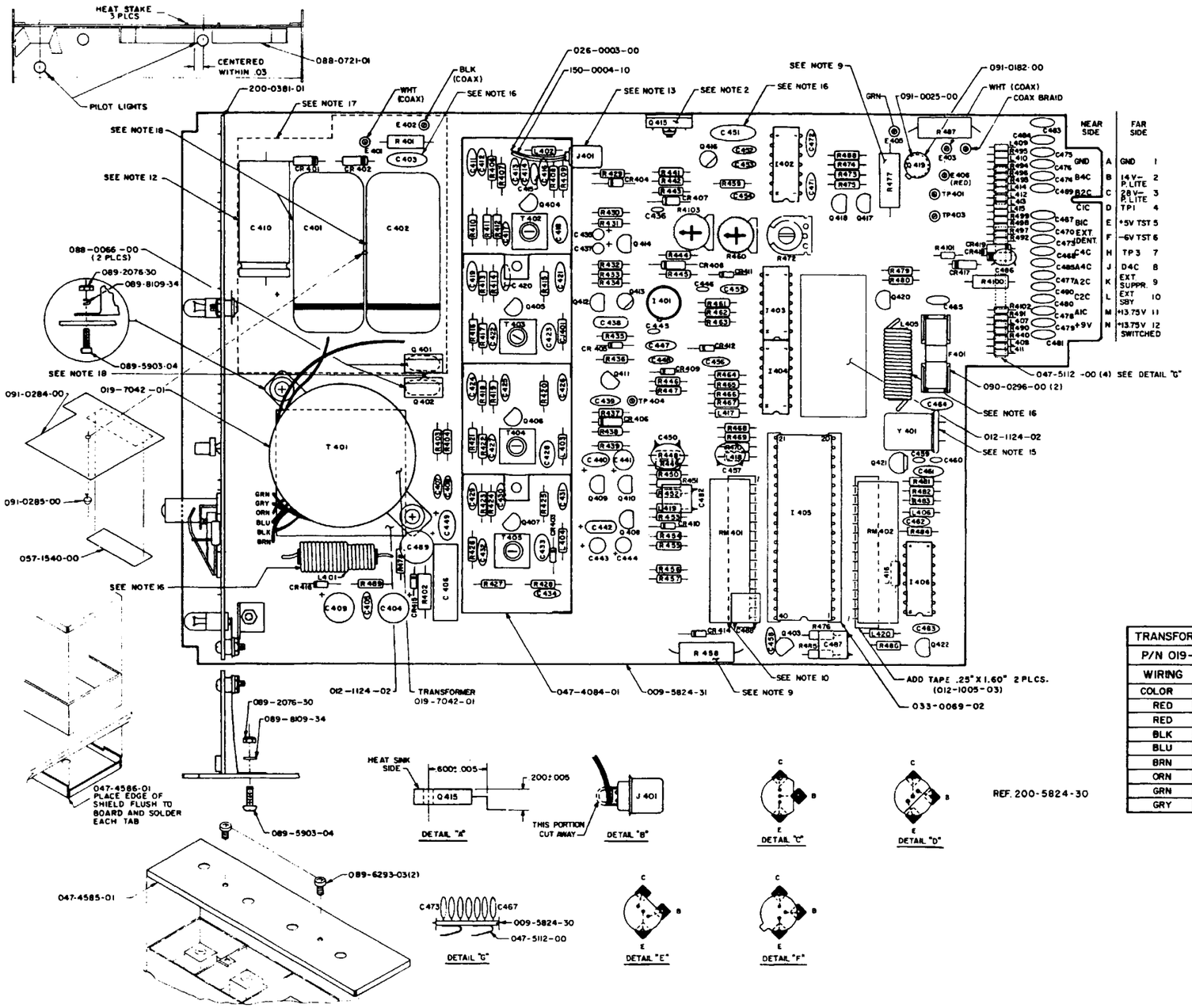


NOTES:

1. ALL COMPONENTS TO BE MOUNTED AS CLOSE TO BOARD AS POSSIBLE, UNLESS OTHERWISE NOTED.
2. Q 415, SEE DETAIL "A". .04 MIN. CLEARANCE BETWEEN TRANS. LEADS AND BOARD SURFACE.
3. Q 408, Q 409, Q 410, Q 412, Q 414, Q 417, Q 418, Q 420, Q 421, Q 422, SEE DETAIL "C".
4. Q 403, Q 413, Q 416, SEE DETAIL "D".
5. Q 404, THRU Q 407, AND Q 411, SEE DETAIL "E".
6. Q 419 SEE DETAIL "F".
7. ~~R 472 MUST BE LAID FLAT TO ALLOW FOR ADJUSTMENT. FOLD OVER AFTER WAVE SOLDERING AND RETAIN WITH R.T.V. (USE PREFORM TOOL NO. 943, TEMPLATE "J").~~
8. ~~R 460 SHOULD LAY FLAT ON BOARD SURFACE, RETAIN WITH R.T.V.~~
9. R 458, R 477, AND R 487, TO BE SPACED .05 MIN. OFF BOARD SURFACE, WITH R 458 AND R 487 BENT TOWARD THE EDGE OF THE BOARD.
10. RM 401 AND RM 402 TO BE BENT OVER, AS SHOWN ON BOARD, MAXIMUM HEIGHT .200 INCHES ABOVE BOARD.
11. BEND C 450 AND C 457 OVER RESISTORS AS SHOWN.
12. C 410 MUST BE AT LEAST .700 INCHES FROM FRONT EDGE OF BOARD, FOR SWITCH BOARD SHAFT CLEARANCE.
13. J 401 TO BE SWAGED AND SOLDERED IN PLACE. ALSO SEE DETAIL "B".
14. I.F. FENCE 047-4084-01 SHOULD HAVE A CONTINUOUS SOLDER SEAM AROUND OUTER EDGE TO P.C. BOARD.
15. APPLY DOUBLE SIDED TAPE (P/N 016-1124-00) TO SECURE CRYSTAL TO P.C. BOARD.
16. APPLY R.T.V. TO COMPONENTS TO SECURE TO BOARD WHERE NOTED, USE KPN 016-1082-00.
17. SPRAY BOTH SIDES OF BOARD WITH P.C. 101 IN THIS AREA BEING CAREFUL NOT TO SPRAY THE SWITCH BOARD CONTACTS AND E 401, E 402.
18. APPLY R.T.V. (016-1082-00) BETWEEN C401 & C402 AND BETWEEN Q401 & Q402 TO SECURE PAIRS TOGETHER FOR ADDED STABILITY.
19. LEAVE FLUX INTACT ON ALL SOLDER CONNECTIONS ON SWITCH BOARD (031-0175-00). DO NOT ALLOW SOLVENT TO COME IN CONTACT WITH SWITCH BOARD. DO NOT ATTEMPT TO CLEAN CONTACT SURFACES OR ROTORS OF SWITCHES.

| TRANSFORMER T401 | |
|---|---|
| P/N 019-7042-01 | |
| WIRING | CHART |
| COLOR | LENGTH |
| RED | 1.75 IN. |
| RED | 2.25 IN. |
| BLK | 1.50 IN. |
| BLU | |
| BRN | |
| ORN | |
| GRN | |
| GRY | |

**FIGURE 6-13 Main Board KT 76A (S/N 14,000 - 39,999), KT 78A (S/N 7000 - )**
**(Dwg. No. 300-05824-0030 R-16)**

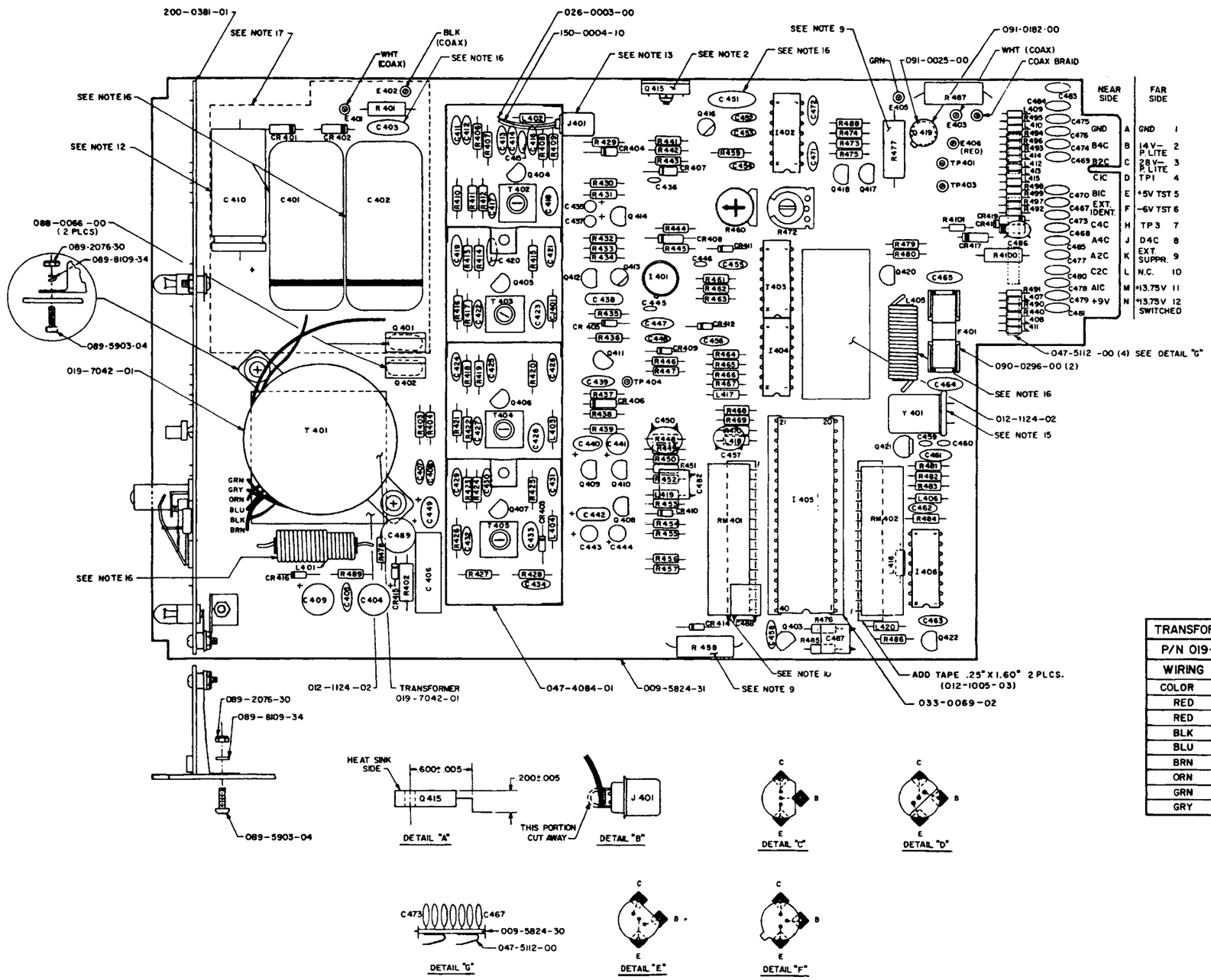


NOTES:

1. ALL COMPONENTS TO BE MOUNTED AS CLOSE TO BOARD AS POSSIBLE, UNLESS OTHERWISE NOTED.
2. Q 415, SEE DETAIL "A". .04 MIN. CLEARANCE BETWEEN TRANS. LEADS AND BOARD SURFACE.
3. Q 408, Q 409, Q 410, Q 412, Q 414, Q 417, Q 418, Q 420, Q 421, Q 422, SEE DETAIL "C".
4. Q 403, Q 413, Q 416, SEE DETAIL "D".
5. Q 404, THRU Q 407, AND Q 411, SEE DETAIL "E".
6. Q 419 SEE DETAIL "F".
7. ~~R 472 MUST BE LAID FLAT TO ALLOW FOR ADJUSTMENT. FOLD OVER AFTER WAVE SOLDERING AND RETAIN WITH R.T.V. (USE PREFORM TOOL NO. 943, TEMPLATE "J").~~
8. ~~R 460 SHOULD LAY FLAT ON BOARD SURFACE, RETAIN WITH R.T.V.~~
9. R 458, R 477, AND R 487, TO BE SPACED .05 MIN. OFF BOARD SURFACE, WITH R 458 AND R 487 BENT TOWARD THE EDGE OF THE BOARD.
10. RM 401 AND RM 402 TO BE BENT OVER, AS SHOWN ON BOARD, MAXIMUM HEIGHT .200 INCHES ABOVE BOARD.
11. BEND C 450 AND C 457 OVER RESISTORS AS SHOWN.
12. C 410 MUST BE AT LEAST .700 INCHES FROM FRONT EDGE OF BOARD, FOR SWITCH BOARD SHAFT CLEARANCE.
13. J 401 TO BE SWAGED AND SOLDERED IN PLACE. ALSO SEE DETAIL "B".
14. I. F. FENCE 047-4084-01 SHOULD HAVE A CONTINUOUS SOLDER SEAM AROUND OUTER EDGE TO P.C. BOARD.
15. APPLY DOUBLE SIDED TAPE (P/N 016-1124-00) TO SECURE CRYSTAL TO P.C. BOARD.
16. APPLY R.T.V. TO COMPONENTS TO SECURE TO BOARD WHERE NOTED, USE KPN 016-1082-00.
17. SPRAY BOTH SIDES OF BOARD WITH P.C. 101 IN THIS AREA BEING CAREFUL NOT TO SPRAY THE SWITCH BOARD CONTACTS AND E 401, E 402.

| TRANSFORMER T 401 | |
|---|---|
| P/N 019-7042-01 | |
| WIRING | CHART |
| COLOR | LENGTH |
| RED | 1.75 IN. |
| RED | 2.25 IN. |
| BLK | 1.50 IN. |
| BLU | |
| BRN | |
| ORN | |
| GRN | |
| GRY | |

**FIGURE 6-13A Main Board KT 76A (S/N 14,000 - 39,999), KT 78A (S/N 7000 - ) (Dwg. No. 300-05824-0030 R-9)**

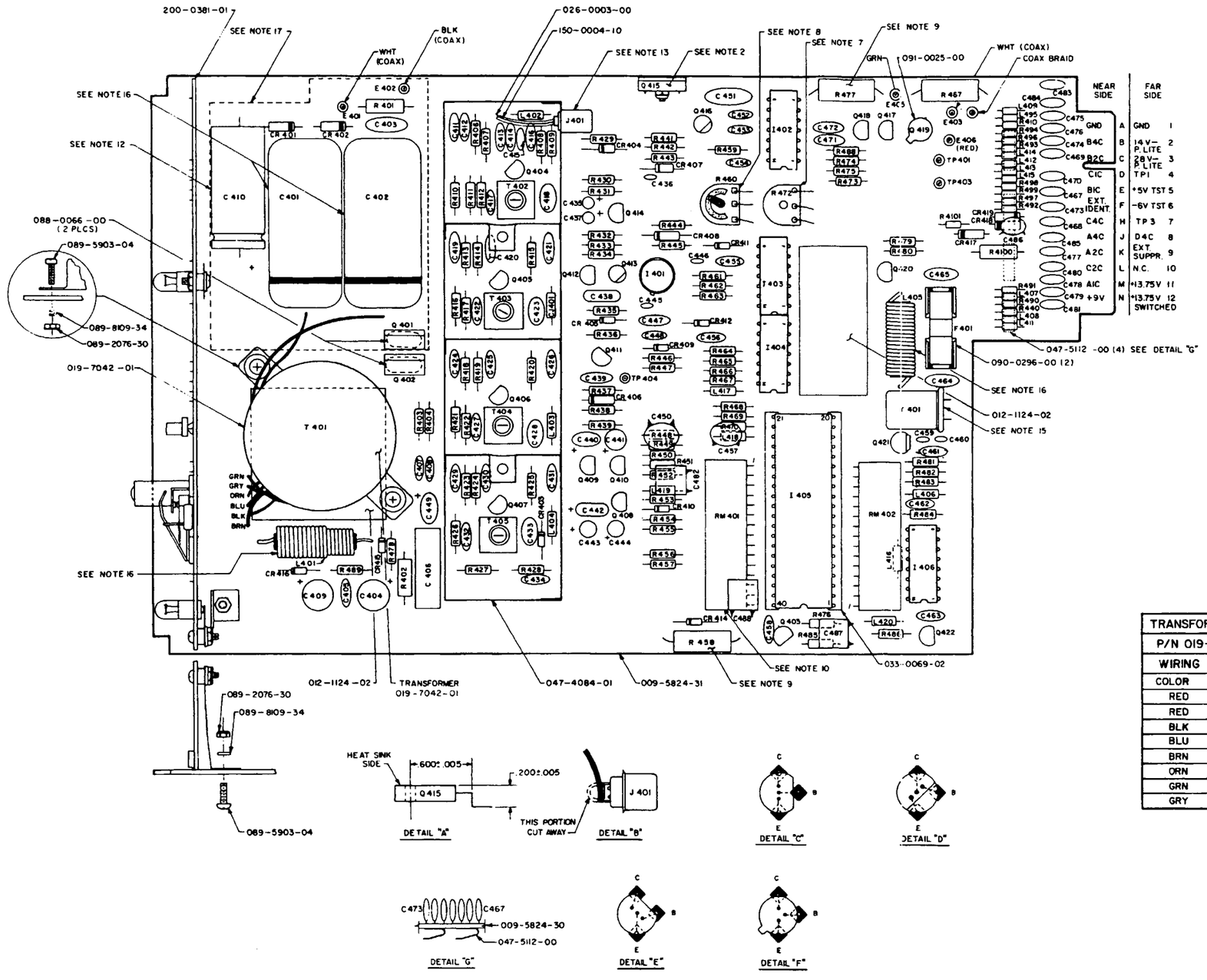


NOTES:

1. ALL COMPONENTS TO BE MOUNTED AS CLOSE TO BOARD AS POSSIBLE, UNLESS OTHERWISE NOTED.
2. Q 415, SEE DETAIL "A". .04 MIN. CLEARANCE BETWEEN TRANS. LEADS AND BOARD SURFACE.
3. Q 408, Q 409, Q 410, Q 412, Q 414, Q 417, Q 418, Q 420, Q 421, Q 422, SEE DETAIL "C".
4. Q 403, Q 413, Q 416, SEE DETAIL "D".
5. Q 404, THRU Q 407, AND Q 411, SEE DETAIL "E".
6. Q 419 SEE DETAIL "F".
7. R 472 MUST BE LAID FLAT TO ALLOW FOR ADJUSTMENT. FOLD OVER AFTER WAVE SOLDERING AND RETAIN WITH R.T.V. (USE PREFORM TOOL NO. 943, TEMPLATE "J").
8. R 460 SHOULD LAY FLAT ON BOARD SURFACE, RETAIN WITH R.T.V.
9. R 458, R 477, AND R 487, TO BE SPACED .05 MIN. OFF BOARD SURFACE, WITH R 458 AND R 477 BENT TOWARD THE EDGE OF THE BOARD.
10. RM 401 AND RM 402 TO BE BENT OVER, AS SHOWN ON BOARD, MAXIMUM HEIGHT .200 INCHES ABOVE BOARD.
11. BEND C 450 AND C 457 OVER RESISTORS AS SHOWN.
12. C 410 MUST BE AT LEAST .700 INCHES FROM FRONT EDGE OF BOARD, FOR SWITCH BOARD SHAFT CLEARANCE.
13. J 401 TO BE SWAGED AND SOLDERED IN PLACE. ALSO SEE DETAIL "B".
14. I.F. FENCE 047-4084-01 SHOULD HAVE A CONTINUOUS SOLDER SEAM AROUND OUTER EDGE TO P.C. BOARD.
15. APPLY DOUBLE SIDED TAPE (P/N 016-1124-00) TO SECURE CRYSTAL TO P.C. BOARD.
16. APPLY R.T.V. TO COMPONENTS TO SECURE TO BOARD WHERE NOTED, USE KPN 016-1082-00.
17. SPRAY BOTH SIDES OF BOARD WITH P.C. 101 IN THIS AREA BEING CAREFUL NOT TO SPRAY THE SWITCH BOARD CONTACTS AND E 401, E 402.

| TRANSFORMER T401 | |
|---|---|
| P/N 019-7042-01 | |
| WIRING | CHART |
| COLOR | LENGTH |
| RED | 1.75 IN. |
| RED | 2.25 IN. |
| BLK | 1.50 IN. |
| BLU | |
| BRN | |
| ORN | |
| GRN | |
| GRY | |

**FIGURE 6-13B Main Board KT 76A (S/N 14,000 - 39,999), KT 78A (S/N 7000 - ) (Dwg. No. 300-05824-0030 R-3)**

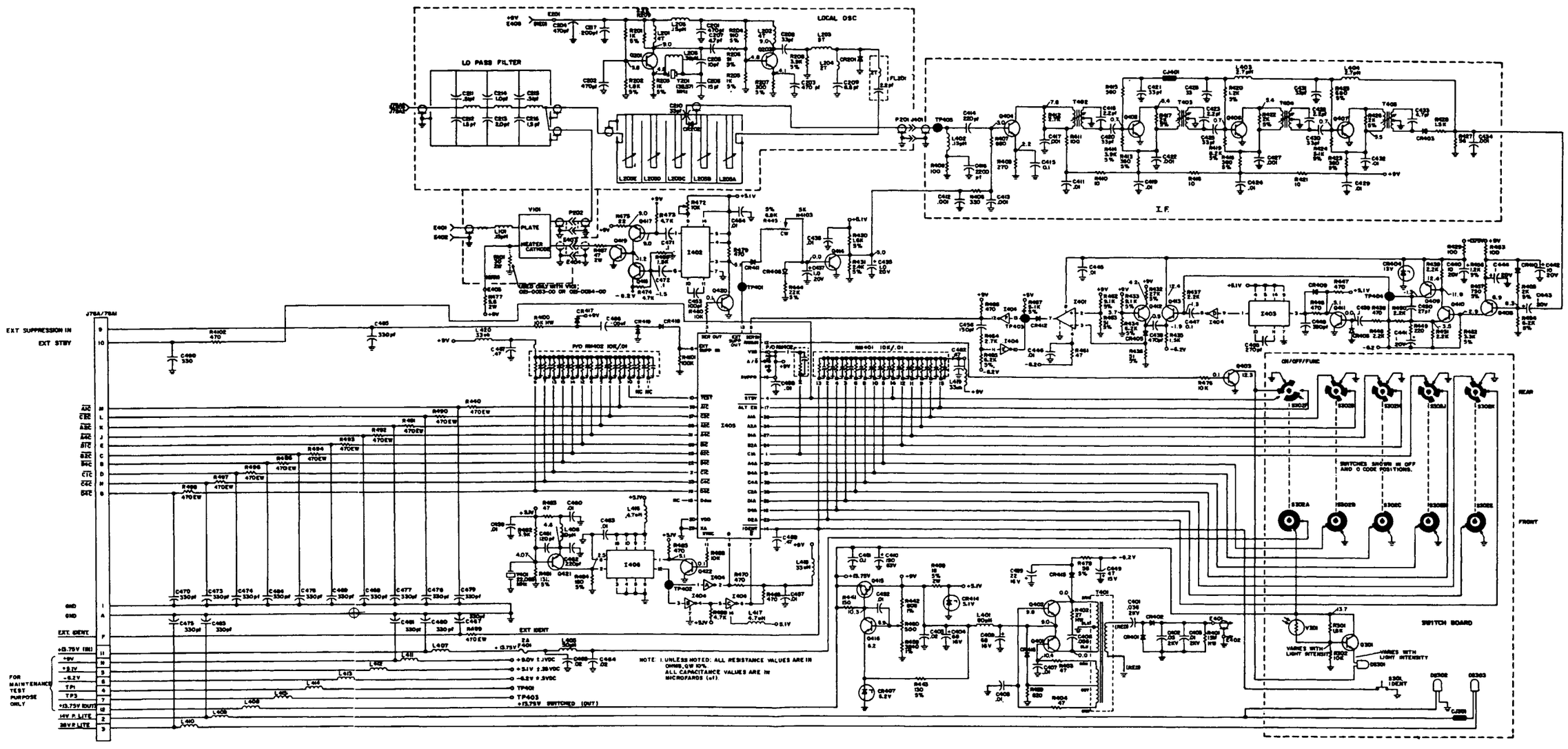


**FIGURE 6-14 Main Board Schematic KT 76A (S/N 14,000 - 39,999), KT 78A (S/N 7000 - )**
**(Dwg. No. 002-00449-0030 R-12)**

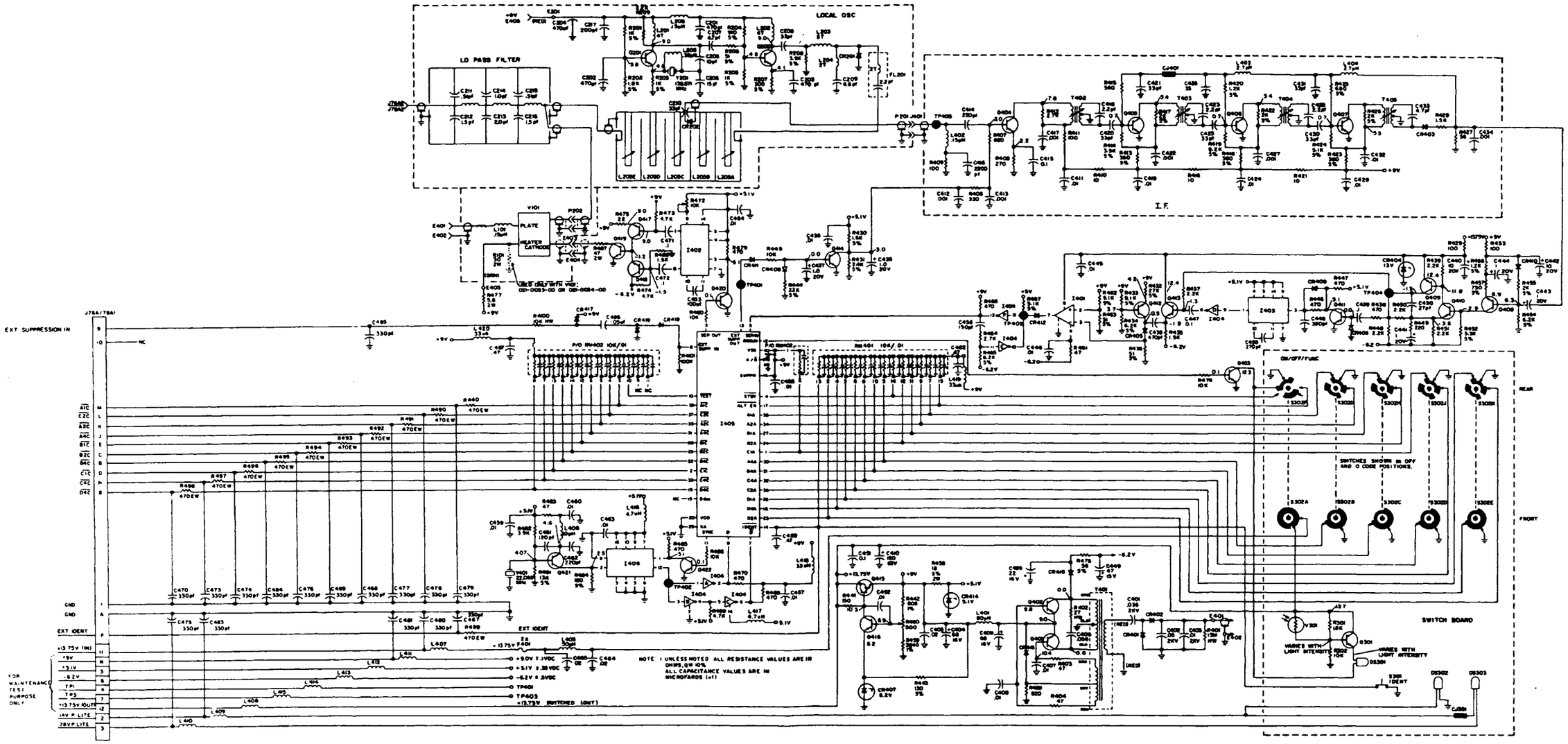


**FIGURE 6-14A Main Board Schematic KT 76A (S/N 14,000 - 39,999), KT 78A (S/N 7000 - )**
**(Dwg. No. 002-00449-0030 R-8)**

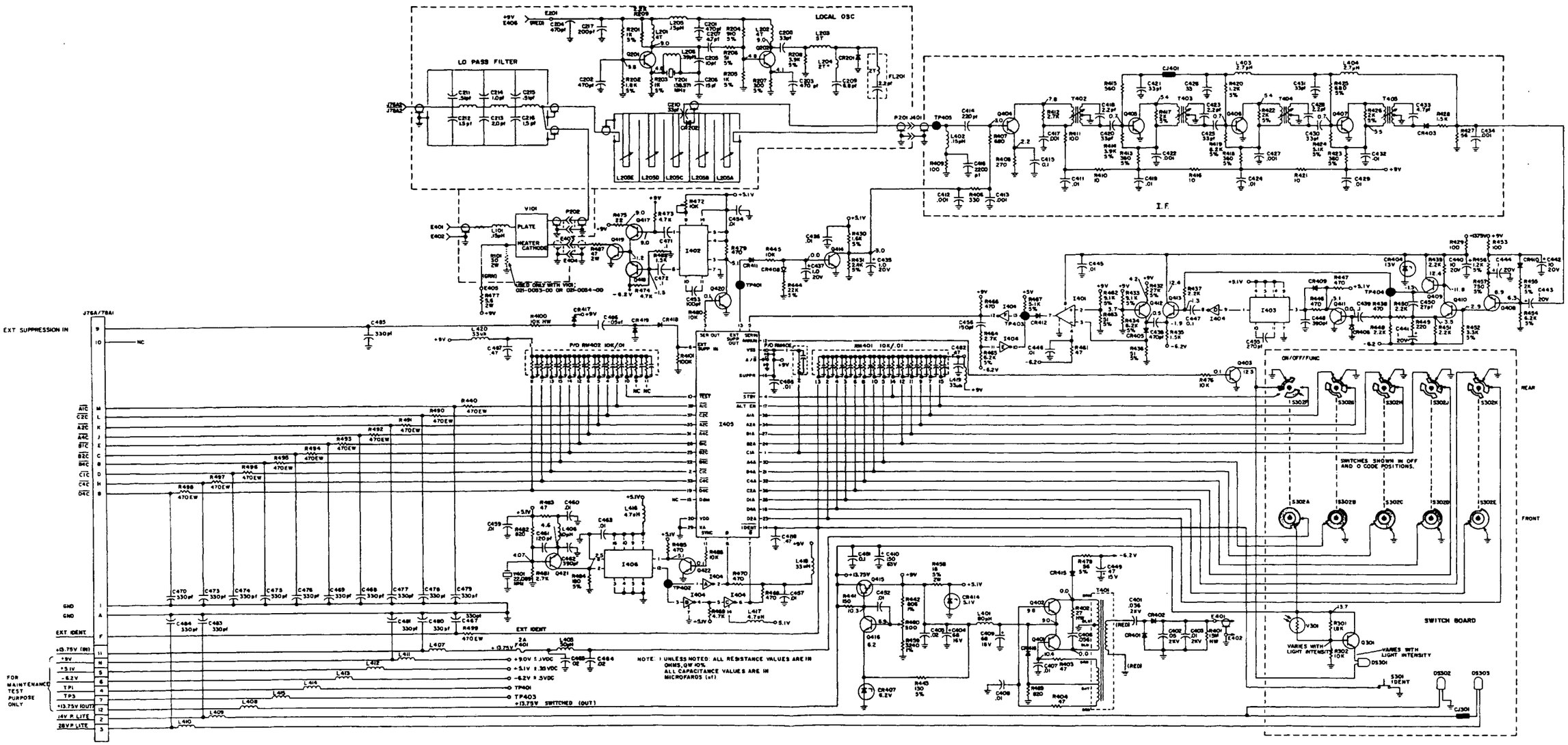


**FIGURE 6-14B Main Board Schematic KT 76A (S/N 14,000 - 39,999), KT 78A (S/N 7000 - )**
**(Dwg. No. 002-00449-0030 R-3)**

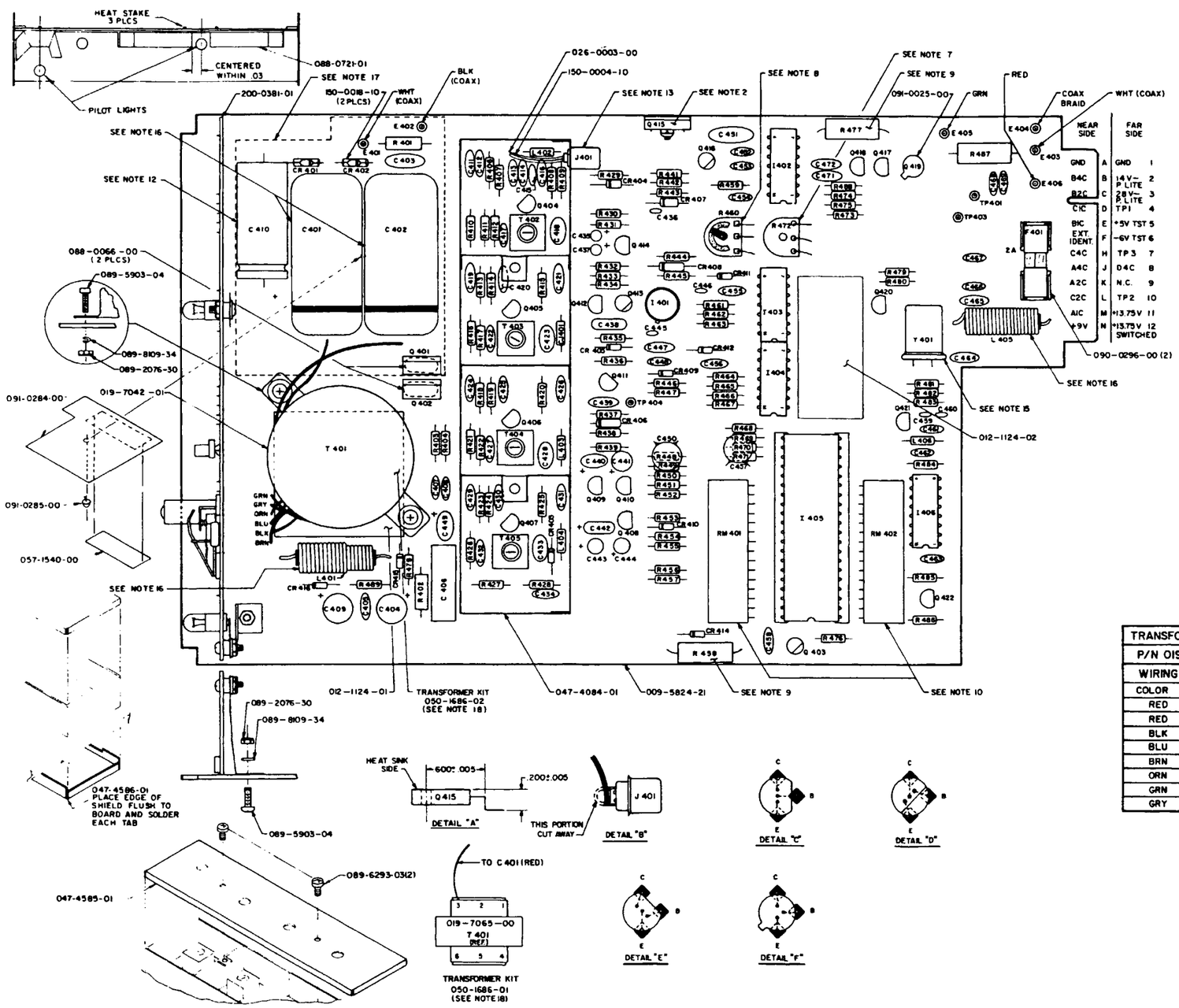


NOTES:

1. ALL COMPONENTS TO BE MOUNTED AS CLOSE TO BOARD AS POSSIBLE, UNLESS OTHERWISE NOTED.
2. Q 415, SEE DETAIL "A". .04 MIN. CLEARANCE BETWEEN TRANS. LEADS AND BOARD SURFACE.
3. Q 408, Q 409, Q 410, Q 412, Q 414, Q 417, Q 418, Q 420, Q 421, Q 422, SEE DETAIL "C".
4. Q 403, Q 413, Q 416, SEE DETAIL "D".
5. Q 404, THRU Q 407, AND Q 411, SEE DETAIL "E".
6. Q 419 SEE DETAIL "F".
7. R 472 MUST BE LAID FLAT TO ALLOW FOR ADJUSTMENT. FOLD OVER AFTER WAVE SOLDERING AND RETAIN WITH R.T.V. (USE PREFORM TOOL NO. 943, TEMPLATE "J").
8. R 460 SHOULD LAY FLAT ON BOARD SURFACE, RETAIN WITH R.T.V.
9. R 458, R 477, AND R 487, TO BE SPACED .05 MIN. OFF BOARD SURFACE, WITH R 458 AND R 477 BENT TOWARD THE EDGE OF THE BOARD.
10. RM 401 AND RM 402 TO BE BENT OVER, AS SHOWN ON BOARD, MAXIMUM HEIGHT .200 INCHES ABOVE BOARD.
11. BEND C 450 AND C 457 OVER RESISTORS AS SHOWN.
12. C 410 MUST BE AT LEAST .700 INCHES FROM FRONT EDGE OF BOARD, FOR SWITCH BOARD SHAFT CLEARANCE.
13. J 401 TO BE SWAGED AND SOLDERED IN PLACE. ALSO SEE DETAIL "B".
14. I.F. FENCE 047-4084-01 SHOULD HAVE A CONTINUOUS SOLDER SEAM AROUND OUTER EDGE TO P.C. BOARD.
15. APPLY DOUBLE SIDED TAPE (P/N 016-1124-00) TO SECURE CRYSTAL TO P.C. BOARD.
16. APPLY R.T.V. TO COMPONENTS TO SECURE TO BOARD WHERE NOTED.
17. SPRAY BOTH SIDES OF BOARD WITH P.C. 101 IN THIS AREA BEING CAREFUL NOT TO SPRAY THE SWITCH BOARD CONTACTS AND E 401, E 402.
18. T 401 MAY BE TRANSFORMER KIT 050-1686-01 OR 050-1686-02.
19. LEAVE FLUX INTACT ON ALL SOLDER CONNECTIONS ON SWITCH BOARD (031-0175-00). DO NOT ALLOW SOLVENT TO COME IN CONTACT WITH SWITCH BOARD. DO NOT ATTEMPT TO CLEAN CONTACT SURFACES OR ROTORS OF SWITCHES.

| TRANSFORMER T 401 | |
|---|---|
| P/N 019-7042-01 | |
| WIRING | CHART |
| COLOR | LENGTH |
| RED | 1.75 IN. |
| RED | 2.25 IN. |
| BLK | 1.50 IN. |
| BLU | |
| BRN | |
| ORN | |
| GRN | |
| GRY | |

**FIGURE 6-15 Main Board KT 76A (S/N 5900 - 13,999), KT 78A (S/N 2600 - 6999)**
**(Dwg. No. 300-05824-0020 R-6)**

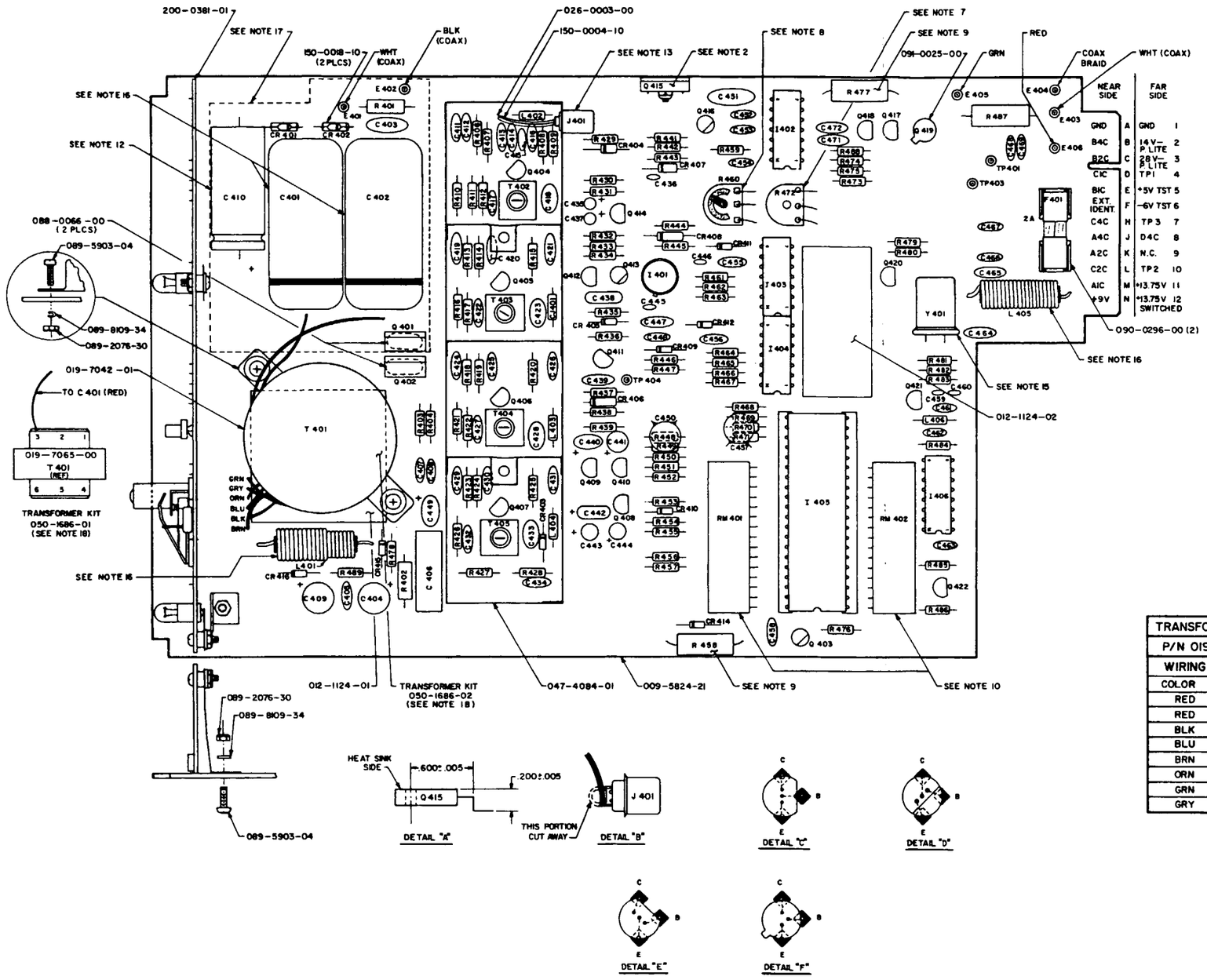


NOTES:

1. ALL COMPONENTS TO BE MOUNTED AS CLOSE TO BOARD AS POSSIBLE, UNLESS OTHERWISE NOTED.
2. Q 415, SEE DETAIL "A". .04 MIN. CLEARANCE BETWEEN TRANS. LEADS AND BOARD SURFACE.
3. Q 408, Q 409, Q 410, Q 412, Q 414, Q 417, Q 418, Q 420, Q 421, Q 422, SEE DETAIL "C".
4. Q 403, Q 413, Q 416, SEE DETAIL "D".
5. Q 404, THRU Q 407, AND Q 411, SEE DETAIL "E".
6. Q 419 SEE DETAIL "F".
7. R 472 MUST BE LAID FLAT TO ALLOW FOR ADJUSTMENT. FOLD OVER AFTER WAVE SOLDERING AND RETAIN WITH R.T.V. (USE PREFORM TOOL NO. 943, TEMPLATE "J").
8. R 460 SHOULD LAY FLAT ON BOARD SURFACE, RETAIN WITH R.T.V.
9. R 458, R 477, AND R 487, TO BE SPACED .05 MIN. OFF BOARD SURFACE, WITH R 458 AND R 477 BENT TOWARD THE EDGE OF THE BOARD.
10. RM 401 AND RM 402 TO BE BENT OVER, AS SHOWN ON BOARD, MAXIMUM HEIGHT .200 INCHES ABOVE BOARD.
11. BEND C 450 AND C 457 OVER RESISTORS AS SHOWN.
12. C 410 MUST BE AT LEAST .700 INCHES FROM FRONT EDGE OF BOARD, FOR SWITCH BOARD SHAFT CLEARANCE.
13. J 401 TO BE SWAGED AND SOLDERED IN PLACE. ALSO SEE DETAIL "B".
14. I.F. FENCE 047-4084-01 SHOULD HAVE A CONTINUOUS SOLDER SEAM AROUND OUTER EDGE TO P.C. BOARD.
15. APPLY DOUBLE SIDED TAPE (P/N 016-1124-00) TO SECURE CRYSTAL TO P.C. BOARD.
16. APPLY R.T.V. TO COMPONENTS TO SECURE TO BOARD WHERE NOTED.
17. SPRAY BOTH SIDES OF BOARD WITH P.C. 101 IN THIS AREA BEING CAREFUL NOT TO SPRAY THE SWITCH BOARD CONTACTS AND E 401, E 402.
18. T 401 MAY BE TRANSFORMER KIT 050-1686-01 OR 050-1686-02.

| TRANSFORMER T 401 | |
|---|---|
| P/N 019-7042-01 | |
| WIRING | CHART |
| COLOR | LENGTH |
| RED | 1.75 IN. |
| RED | 2.25 IN. |
| BLK | 1.50 IN. |
| BLU | |
| BRN | |
| ORN | |
| GRN | |
| GRY | |

**FIGURE 6-15A Main Board KT 76A (S/N 5900 - 13,999), KT 78A (S/N 2600 - 6999)**
**(Dwg. No. 300-05824-0020 R-4)**

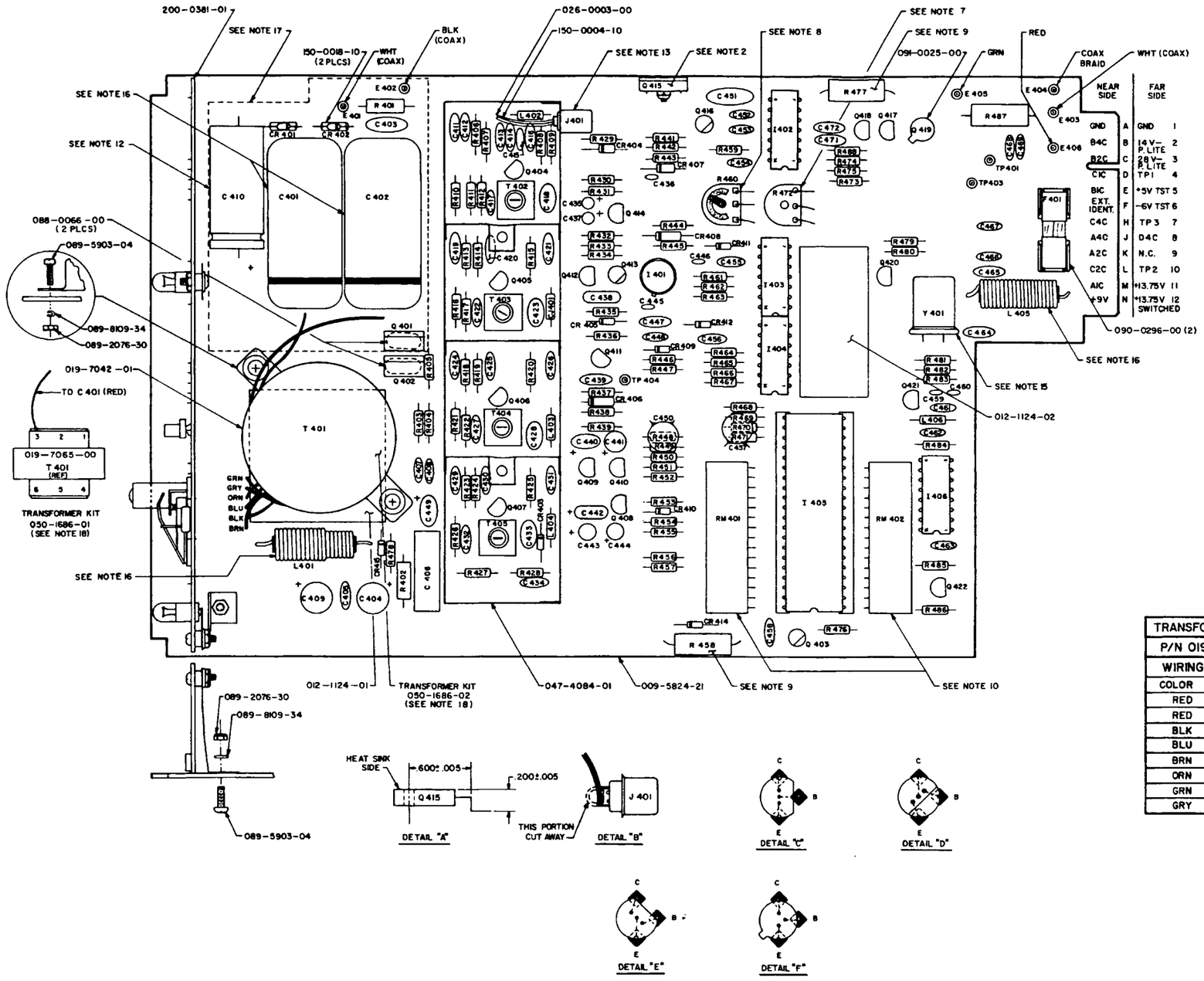


NOTES:

1. ALL COMPONENTS TO BE MOUNTED AS CLOSE TO BOARD AS POSSIBLE, UNLESS OTHERWISE NOTED.
2. Q 415, SEE DETAIL "A". .04 MIN. CLEARANCE BETWEEN TRANS. LEADS AND BOARD SURFACE.
3. Q 408, Q 409, Q 410, Q 412, Q 414, Q 417, Q 418, Q 420, Q 421, Q 422, SEE DETAIL "C".
4. Q 403, Q 413, Q 416, SEE DETAIL "D".
5. Q 404, THRU Q 407, AND Q 411, SEE DETAIL "E".
6. Q 419 SEE DETAIL "F".
7. R 472 MUST BE LAID FLAT TO ALLOW FOR ADJUSTMENT. FOLD OVER AFTER WAVE SOLDERING AND RETAIN WITH R.T.V. (USE PREFORM TOOL NO. 943, TEMPLATE "J").
8. R 460 SHOULD LAY FLAT ON BOARD SURFACE, RETAIN WITH R.T.V.
9. R 458, R 477, AND R 487, TO BE SPACED .05 MIN. OFF BOARD SURFACE, WITH R 458 AND R 477 BENT TOWARD THE EDGE OF THE BOARD.
10. RM 401 AND RM 402 TO BE BENT OVER, AS SHOWN ON BOARD.
11. BEND C 450 AND C 457 OVER RESISTORS AS SHOWN.
12. C 410 MUST BE AT LEAST .700 INCHES FROM FRONT EDGE OF BOARD, FOR SWITCH BOARD SHAFT CLEARANCE.
13. J 401 TO BE SWAGED AND SOLDERED IN PLACE. ALSO SEE DETAIL "B".
14. I.F. FENCE 047-4084-01 SHOULD HAVE A CONTINUOUS SOLDER SEAM AROUND OUTER EDGE TO P.C. BOARD.
15. APPLY DOUBLE SIDED TAPE (P/N 016-1124-00) TO SECURE CRYSTAL TO P.C. BOARD.
16. APPLY R.T.V. TO COMPONENTS TO SECURE TO BOARD WHERE NOTED.
17. SPRAY BOTH SIDES OF BOARD WITH P.C. 101 IN THIS AREA BEING CAREFUL NOT TO SPRAY THE SWITCH BOARD CONTACTS AND E 401, E 402.
18. T 401 MAY BE TRANSFORMER KIT 050-1686-01 OR 050-1686-02

| TRANSFORMER T 401 | |
|---|---|
| P/N 019-7042-01 | |
| WIRING | CHART |
| COLOR | LENGTH |
| RED | 1.75 IN. |
| RED | 2.25 IN. |
| BLK | 1.50 IN. |
| BLU | |
| BRN | |
| ORN | |
| GRN | |
| GRY | |

**FIGURE 6-15B Main Board KT 76A (S/N 5900 - 13,999), KT 78A (S/N 2600 - 6999) (Dwg. No. 300-05824-0020 R-2)**

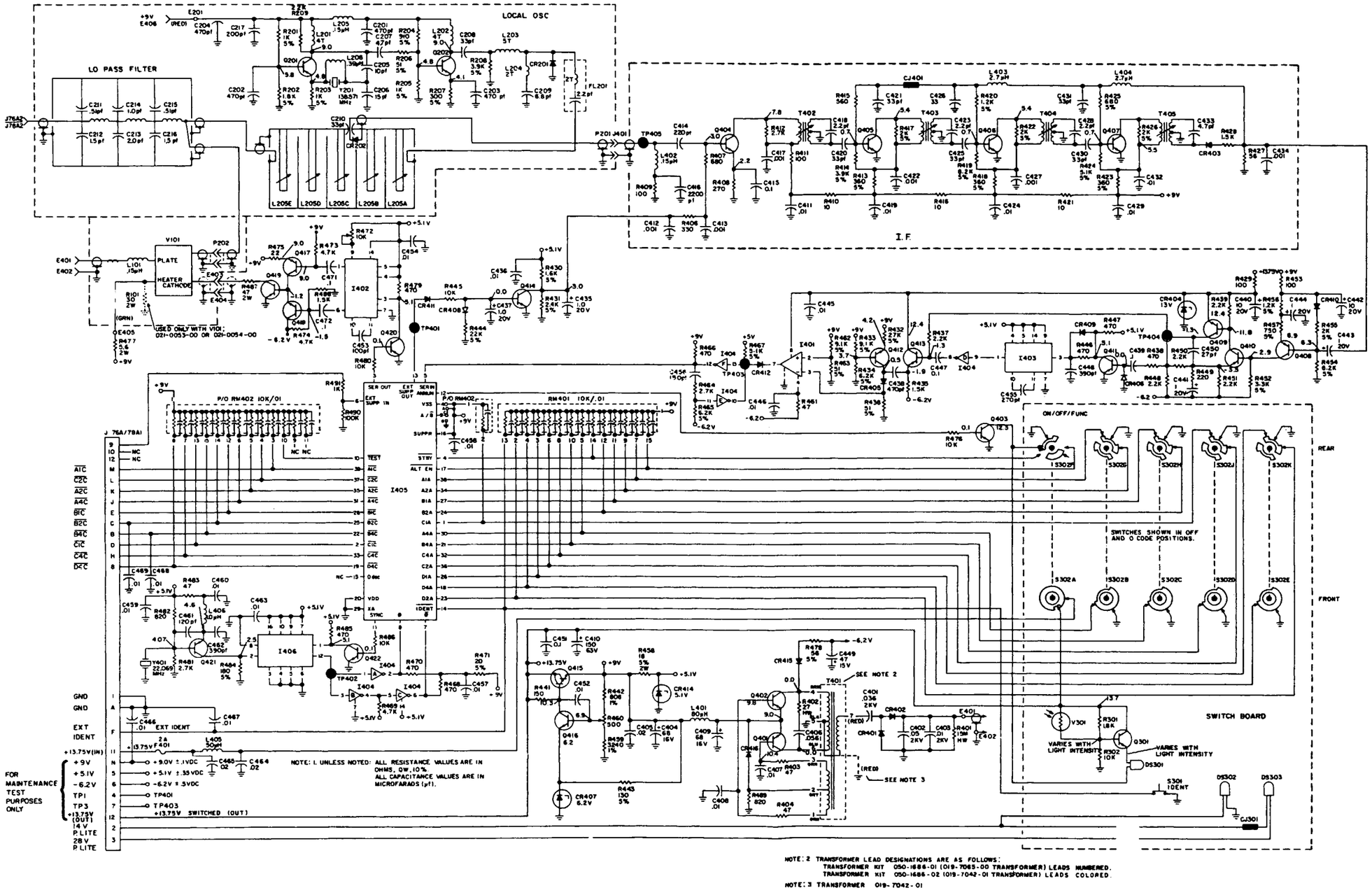


**FIGURE 6-16 Main Board Schematic KT 76A (S/N 5900 - 13,999), KT 78A (S/N 2600 - 6999) (Dwg. No. 002-00449-0020 R-4)**

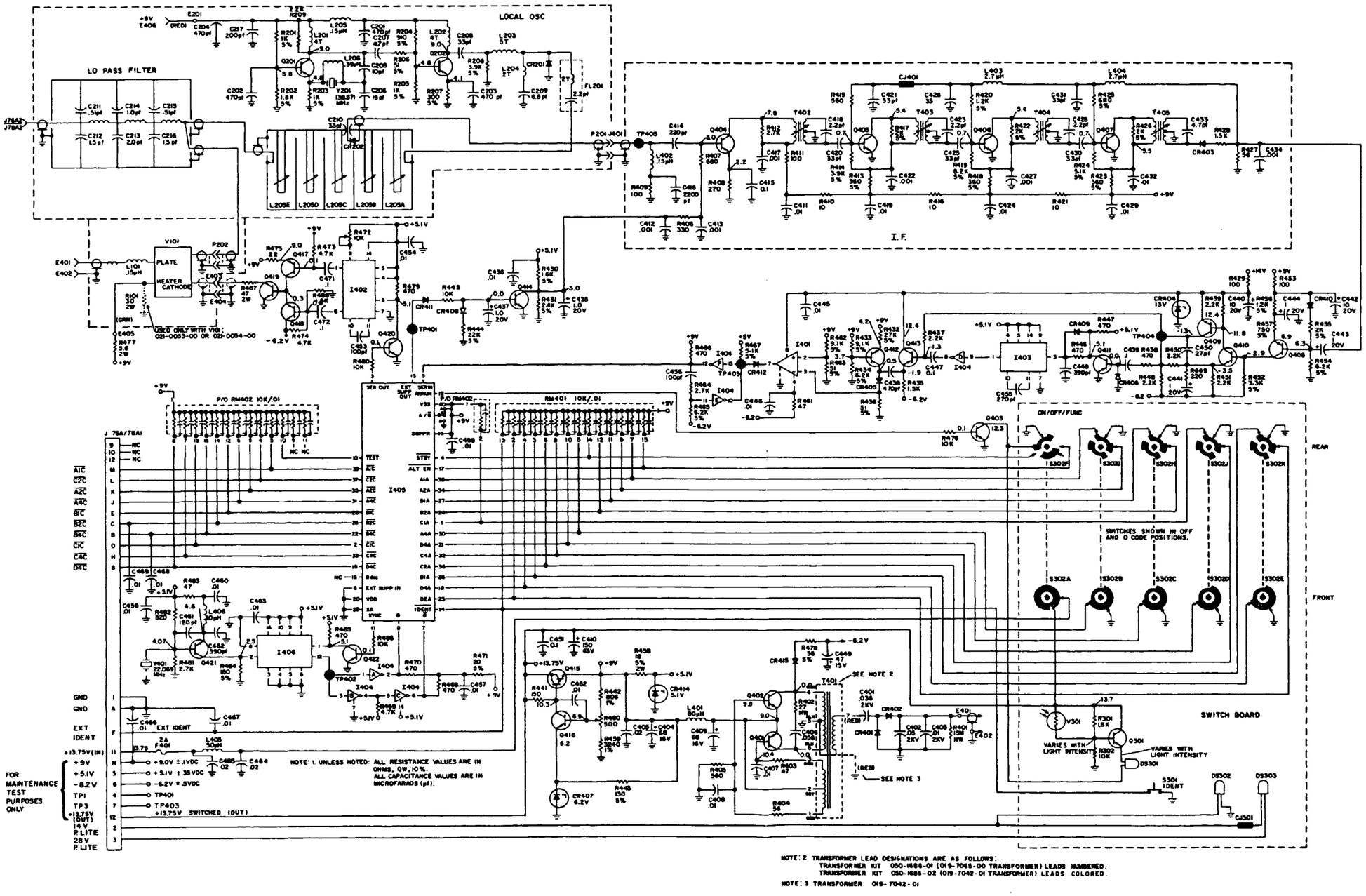


**FIGURE 6-16A Main Board Schematic KT 76A (S/N 5900 - 13,999), KT 78A (S/N 2600 - 6999) (Dwg. No. 002-00449-0020 R-1)**

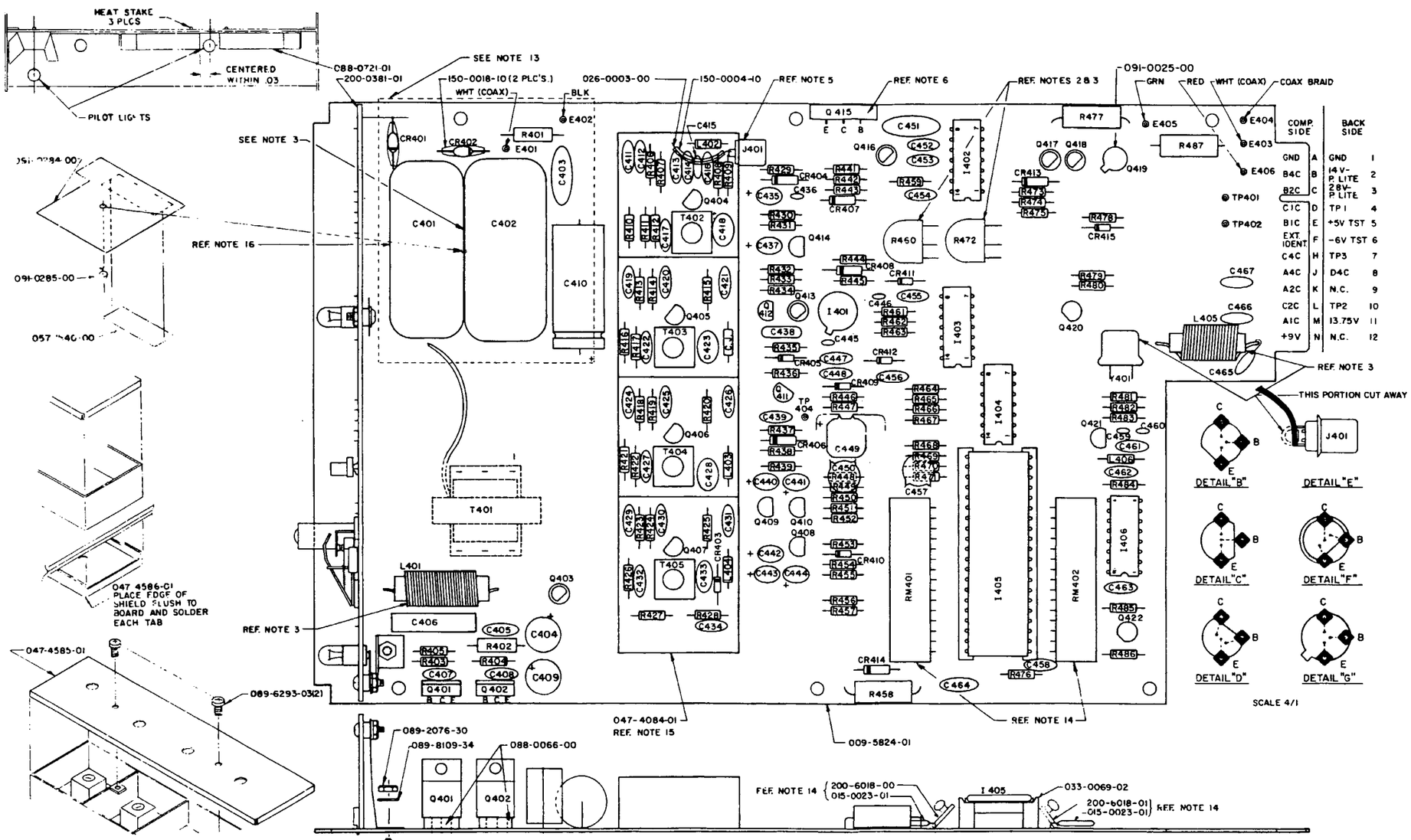


13. SPRAY BOTH SIDES OF BOARD WITH PC 101 IN THIS AREA BEING CAREFUL NOT TO SPRAY THE SWITCH BOARD CONTACTS AND E401, E402.
14. R/C NETWORK 015-0045-00 REPLACES (200-6018-00 AND 015-0023-01) OR (200-6018-01 AND 015-0023-01).
15. I.F. FENCE 047-4084-01 SHOULD HAVE A CONTINUOUS SOLDER SEAM AROUND OUTER EDGE TO P.C. BOARD.
16. C401 MUST BE AT LEAST .940 INCHES FROM FRONT EDGE OF BOARD FOR SWITCH BOARD SHAFT CLEARANCE.
17. LEAVE FLUX INTACT ON ALL SOLDER CONNECTIONS ON SWITCH BOARD (031-0175-00). DO NOT ALLOW SOLVENT TO COME IN CONTACT WITH SWITCH BD. DO NOT ATTEMPT TO CLEAN CONTACT SURFACE OR ROTORS OF SWITCHES.

NOTES

1. BEND C450 AND C457 OVER RESISTORS AS SHOWN.
2. R460 AND R472 MUST BE LAID FLAT TO ALLOW FOR ADJUSTMENT. FOLD OVER AFTER WAVE SOLDERING AND RETAIN WITH RTV. (USE PREFORM TOOL NO. 943 TEMPLATE J.)
3. APPLY RTV 016-1082-00 TO COMPONENTS TO SECURE TO BOARD WHERE NOTED.
4. R458 AND R477 TO BE BENT TOWARD EDGE OF BOARD. RM401 AND RM402 TO BE BENT OVER AS SHOWN.
5. J401 TO BE SWAGED AND SOLDERED IN PLACE. ALSO SEE DETAIL "E."
6. Q415, SEE DETAIL "A."
7. REMAINING COMPONENTS TO BE MOUNTED AS CLOSE TO BOARD AS POSSIBLE.
8. Q420 AND Q422, SEE DETAIL "B."
9. Q408, Q409, Q410, Q412, Q414, AND Q421, SEE DETAIL "C."
10. Q404, Q405, Q406, Q407, AND Q411, SEE DETAIL "D."
11. Q403, Q413, AND Q416, Q417, AND Q418, SEE DETAIL "F."
12. Q419, SEE DETAIL "G."

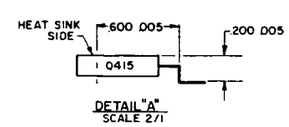


**FIGURE 6-17 Main Board KT 76A (S/N 0 - 5899), KT 78A (S/N 0 - 2599)**
**(Dwg. No. 300-05824-0000 R-14)**

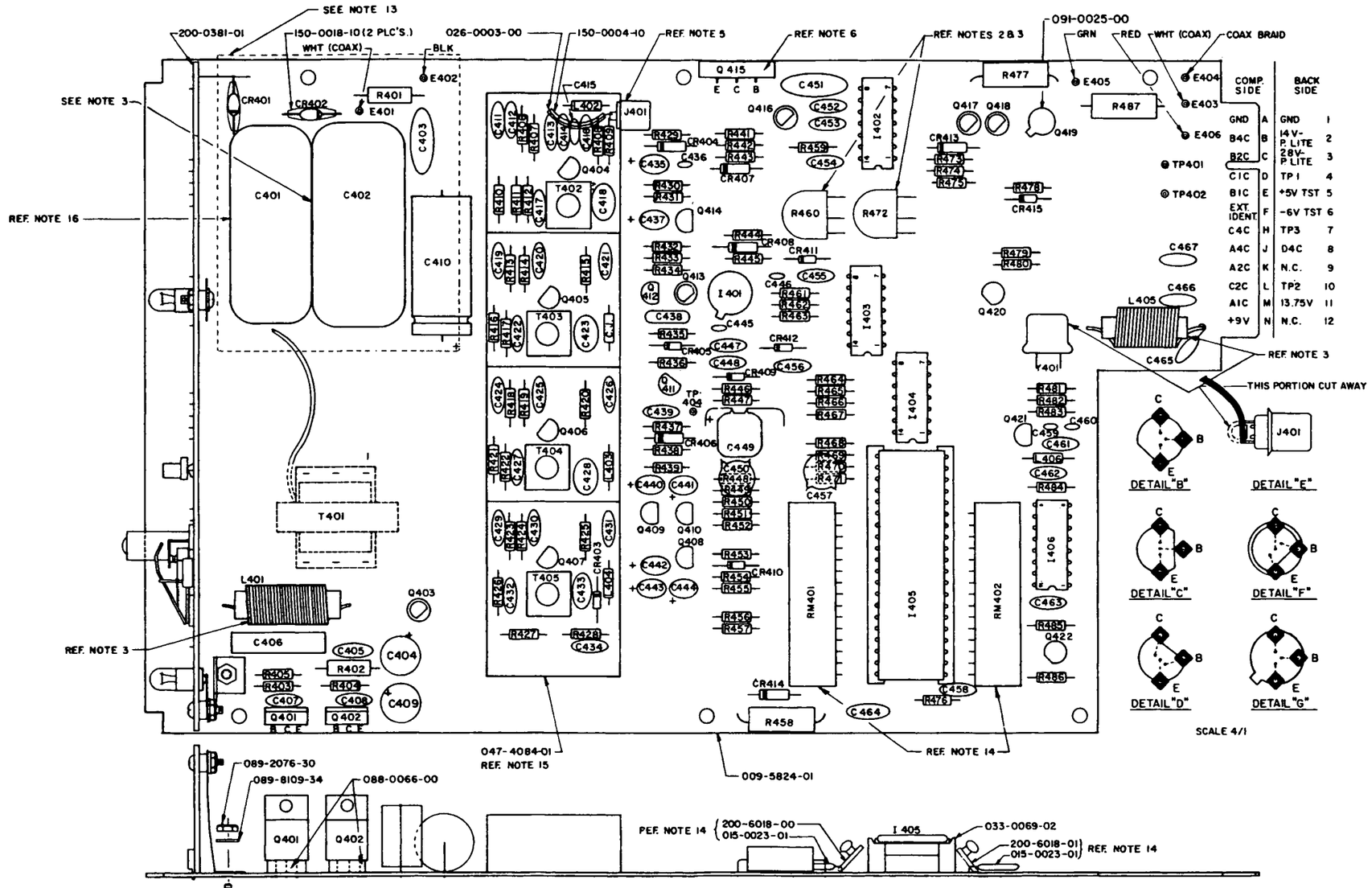


13. SPRAY BOTH SIDES OF BOARD WITH PC 101 IN THIS AREA BEING CAREFUL NOT TO SPRAY THE SWITCH BOARD CONTACTS AND E401, E402.
14. R/C NETWORK 015-0045-00 REPLACES (200-6018-00 AND 015-0023-01) OR (200-6018-01 AND 015-0023-01).
15. I.F. FENCE 047-4084-01 SHOULD HAVE A CONTINUOUS SOLDER SEAM AROUND OUTER EDGE TO P.C. BOARD.
16. C401 MUST BE AT LEAST .940 INCHES FROM FRONT EDGE OF BOARD FOR SWITCH BOARD SHAFT CLEARANCE.

**NOTES**

1. BEND C450 AND C457 OVER RESISTORS AS SHOWN.
2. R460 AND R472 MUST BE LAID FLAT TO ALLOW FOR ADJUSTMENT. FOLD OVER AFTER WAVE SOLDERING AND RETAIN WITH RTV. (USE PREFORM TOOL NO. 943 TEMPLATE J.)
3. APPLY RTV 016-1082-00 TO COMPONENTS TO SECURE TO BOARD WHERE NOTED.
4. R458 AND R477 TO BE BENT TOWARD EDGE OF BOARD. RM401 AND RM402 TO BE BENT OVER AS SHOWN.
5. J401 TO BE SWAGED AND SOLDERED IN PLACE. ALSO SEE DETAIL "E."
6. Q415, SEE DETAIL "A".
7. REMAINING COMPONENTS TO BE MOUNTED AS CLOSE TO BOARD AS POSSIBLE.
8. Q420 AND Q422, SEE DETAIL "B".
9. Q408, Q409, Q410, Q412, Q414, AND Q421, SEE DETAIL "C."
10. Q404, Q405, Q406, Q407, AND Q411, SEE DETAIL "D."
11. Q403, Q413, AND Q416, Q417, AND Q418, SEE DETAIL "F."
12. Q419, SEE DETAIL "G".

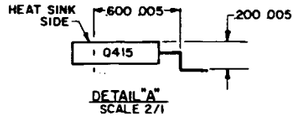


**FIGURE 6-17A Main Board KT 76A (S/N 0 - 5899), KT 78A (S/N 0 - 2599)**
**(Dwg. No. 300-05824-0000 R-12)**

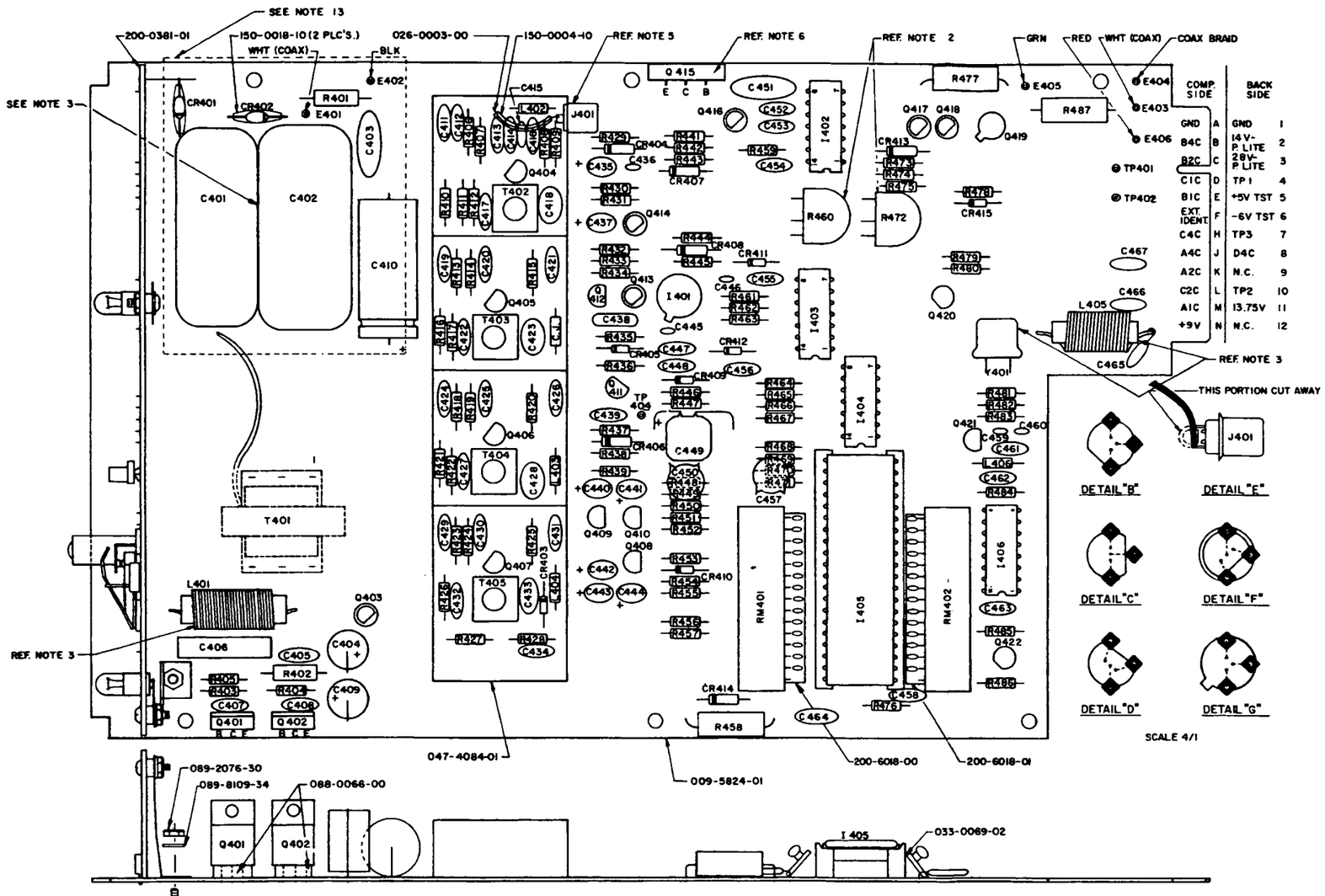


**NOTES**

1. BEND C450 AND C457 OVER RESISTORS AS SHOWN.
2. R460 AND R472 MUST BE LAID FLAT TO ALLOW FOR ADJUSTMENT.
3. APPLY RTV TO COMPONENTS TO SECURE TO BOARD WHERE NOTED.
4. R458 AND R477 TO BE BENT TOWARD EDGE OF BOARD. RM401 AND RM402 TO BE BENT OVER AS SHOWN.
5. J401 TO BE SWAGED AND SOLDERED IN PLACE. ALSO SEE DETAIL "E."
6. Q415, SEE DETAIL "A."
7. REMAINING COMPONENTS TO BE MOUNTED AS CLOSE TO BOARD AS POSSIBLE.
8. Q420 AND Q422, SEE DETAIL "B".
9. Q408, Q409, Q410, Q412, AND Q421, SEE DETAIL "C."
10. Q404, Q405, Q406, Q407, AND Q411, SEE DETAIL "D."
11. Q403, Q413, Q414, Q416, Q417, AND Q418, SEE DETAIL "F."
12. Q419, SEE DETAIL "G."
13. SPRAY BOTH SIDES OF BOARD WITH PC 101 IN THIS AREA BEING CAREFUL NOT TO SPRAY THE SWITCH BOARD CONTACTS AND E401, E402.

**FIGURE 6-17B Main Board KT 76A (S/N 0 - 5899), KT 78A (S/N 0 - 2599)**
**(Dwg. No. 300-05824-0000 R-10)**

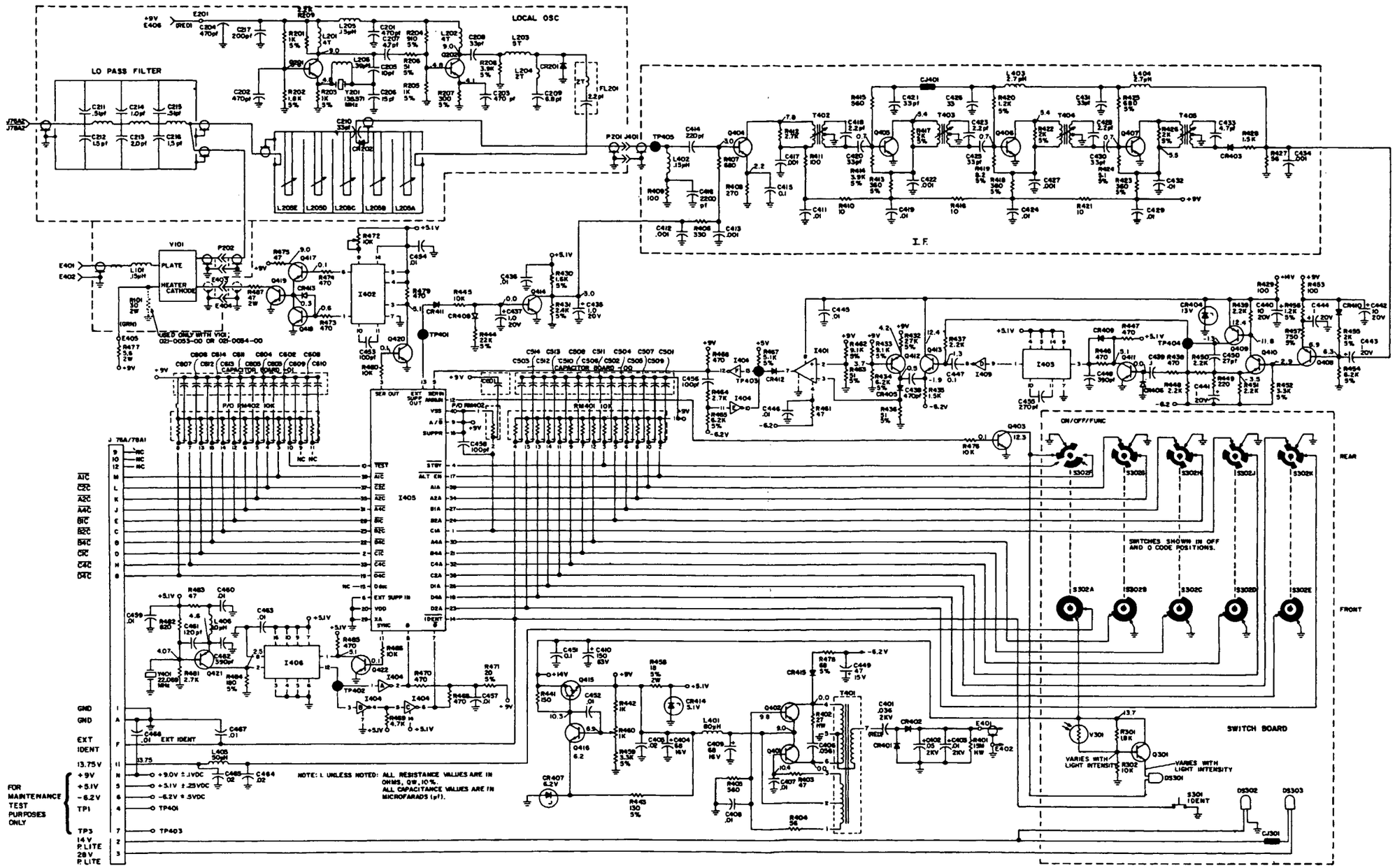


**FIGURE 6-18 Main Board Schematic KT 76A (S/N 0 - 5899), KT 78A (S/N 0 - 2599) (Dwg. No. 002-00449-0000 R-7)**

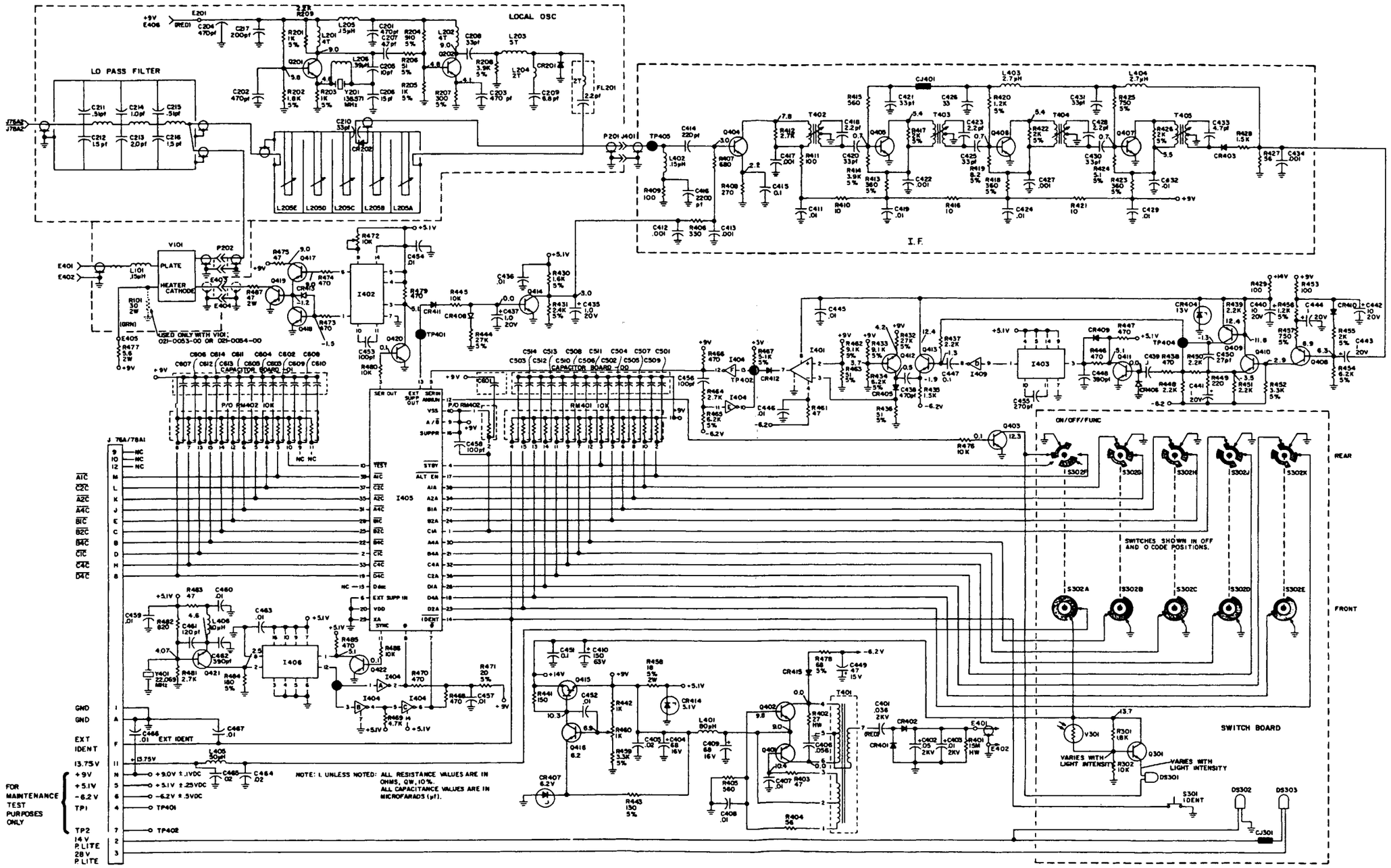


**FIGURE 6-18A Main Board Schematic KT 76A (S/N 0 - 5899), KT 78A (S/N 0 - 2599)**
**(Dwg. No. 002-00449-0000 R-6)**

## 6.6 200-09080-0000 Rev. AA SWITCH BOARD ASSY
## 200-09080-0020 Rev. C SWITCH BOARD ASSY

| SYMBOL | EAS PART NBR | DESCRIPTION | [UOM] | -0000 | -0020 |
|---|---|---|---|---|---|
| DS 1 | 037-00034-0002 | LMP 8098 T1 14V | [EA] | 1 | 1 |
| DS 2 | 037-00034-0002 | LMP 8098 T1 14V | [EA] | 1 | 1 |
| DS 3 | 037-00034-0002 | LMP 8098 T1 14V | [EA] | 1 | 1 |
| DS 4 | 037-00034-0002 | LMP 8098 T1 14V | [EA] | 1 | 1 |
| DS 5 | 007-06567-0001 | ORANGE LED | [EA] | 1 | 1 |
| ITM 1 | 009-09080-0000 | SWITCH BOARD | [EA] | 1 | |
| ITM 1 | 009-09080-0020 | PWB SWITCHBOARD | [EA] | | 1 |
| ITM 2 | 088-03214-0001 | """WHEEL,DTNT/REFLCTR """ | [EA] | 5 | 5 |
| ITM 3 | 088-00765-0000 | HOUSING SWITCH | [EA] | 5 | 5 |
| ITM 4 | 088-00275-0000 | RTNR BULB | [EA] | 1 | 1 |
| ITM 5 | 150-00003-0010 | TUBING TFLN 24AWG | [IN] | 1.5 | 1.5 |
| ITM 6 | 089-06414-0007 | SCR PHP 2-28X7/16 | [EA] | 11 | 11 |
| ITM 7 | 150-00024-0000 | TUBING SHRINK 10G | [IN] | 0.25 | 0.25 |
| P 1 | 030-02185-0016 | RGT ANG HDR 26P | [EA] | 1 | 1 |
| Q 1 | 007-00383-0001 | XSTR S NPN 2N2222A | [EA] | 1 | 1 |
| R 1 | 131-00183-0013 | RES CF 18K EW 5% | [EA] | | 1 |
| R 1 | 131-00183-0023 | RES CF 18K QW 5% | [EA] | 1 | |
| R 2 | 131-00472-0013 | RES CF 4.7K EW 5% | [EA] | | 1 |
| R 2 | 131-00472-0023 | RES CF 4.7K QW 5% | [EA] | 1 | |
| R 4 | 131-00471-0013 | RES CF 470 EW 5% | [EA] | | 1 |
| R 4 | 131-00471-0023 | RES CF 470 QW 5% | [EA] | 1 | |
| R 5 | 131-00623-0013 | RES CF 62K EW 5% | [EA] | | 1 |
| R 5 | 131-00623-0023 | RES CF 62K QW 5% | [EA] | 1 | |
| SW 6 | 031-00173-0000 | SWITCH PB NO | [EA] | 1 | 1 |
| V 1 | 134-05005-0002 | PHOTODETECTOR | [EA] | 1 | 1 |
| REF 1 | 300-09080-0020 | SWITCH BOARD | [RF] | | X |
| REF 2 | 002-09080-0020 | SWITCH BOARD SCHEMATIC | [RF] | | X |

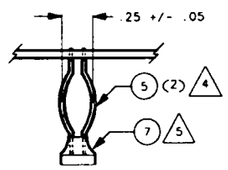


VIEW A-A

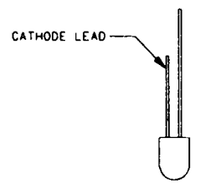


DS5

NOTES:

1. POST COATING FOR BOTH SIDES OF P.C. BOARD NOT REQUIRED.
2. PRINTED CIRCUIT ASSEMBLY IDENTIFICATION MUST BE IN ACCORDANCE WITH SPEC. 001-01101-0000.
3. LIQUID STAKE ALL FASTENERS PER SPEC. 001-01080-0000
4. SLIDE ITEM 5 OVER EACH LEAD OF V1. CUT LENGTH FOR ITEM 5 IS .72 +/- .03. AFTER SOLDERING IN BOARD, FORM LEADS AS SHOWN IN VIEW A-A.
5. LOCATE ITEM 7 OVER PHOTO CELL AS SHOWN IN VIEW A-A. EDGE OF ITEM 7 FLUSH WITH FACE OF PHOTO CELL.

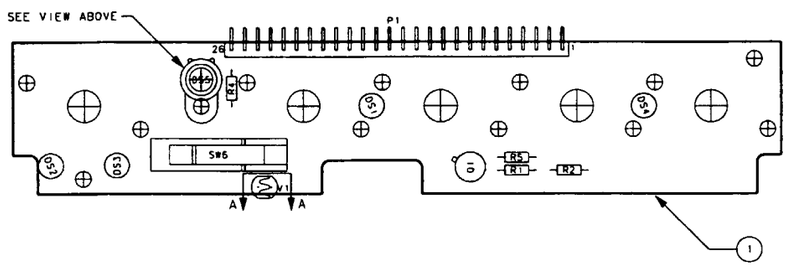


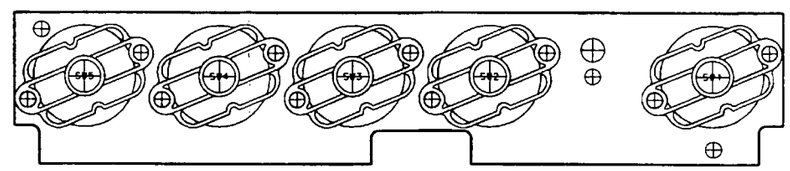


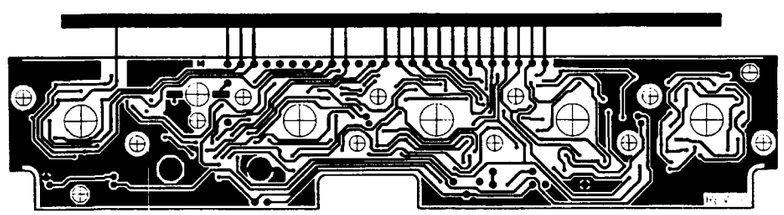

NEARSIDE VIEW OF PC BOARD

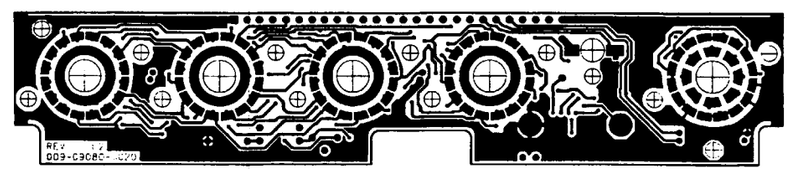

FARSIDE VIEW OF PC BOARD

NOTE: ANY FILL AREAS ON THE TRACE LAYER SHOWN MAY NOT REPRESENT FINAL ARTWORK AS THERMAL RELIEFS MAY NOT BE SHOWN.

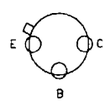


TOP SIDE: Q1

**FIGURE 6-19 KT 76A Switch Board (S/N ≥120,800)**
**(Dwg. No. 300-09080-0020 R-A), Sheet 1 of 2**

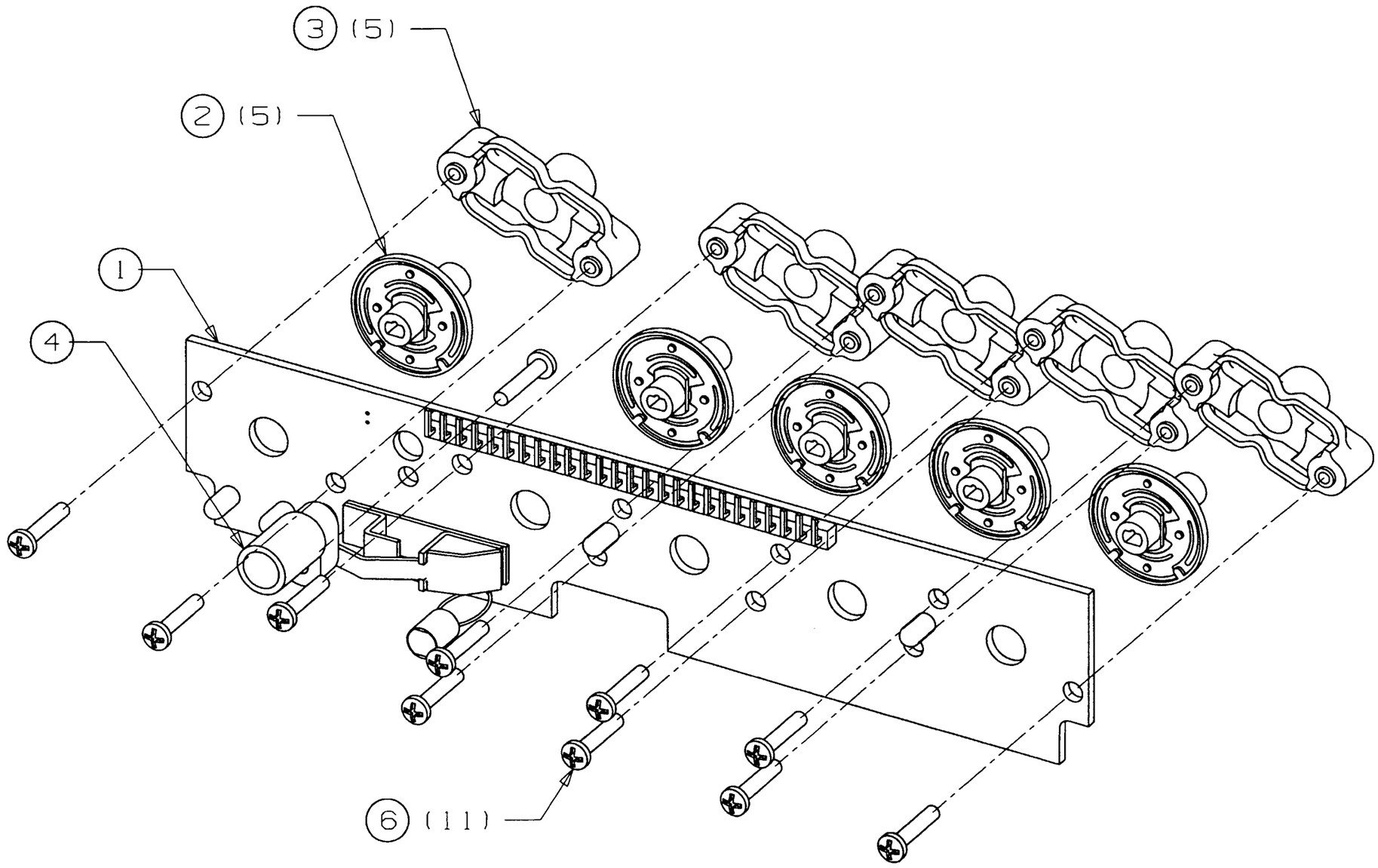


**FIGURE 6-19 KT 76A Switch Board (S/N ≥120,800)**
**(Dwg. No. 300-09080-0020 R-A), Sheet 2 of 2**

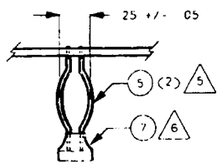


VIEW A-A

REWORK NOTES
A. CUT TRACE AS SHOWN
B. SOLDER LEG OF RESISTOR R4 TO THE PAD AS SHOWN. WRAP MAGWIRE TO THE OTHER LEAD, POSITIONING CLOSE TO THE BODY OF R4 AND SOLDER IN PLACE. TRIM OFF EXCESS LEAD LENGTH OF R4. SOLDER OTHER END OF MAGWIRE TO FEED THRU AS SHOWN
C. USE TACPAC (016-01144-0000) AND ACCELERATOR(016-01144-0001) AS REQUIRED SECURE R4 AND R5 TO BOARD WITH RTV(016-01082-0000)
D. SOLDER ONE LEAD OF R5 TO PAD AS SHOWN. SECURE R5 TO BOARD (SEE NOTE C). TRIM THE OTHER LEAD CLOSE TO BODY OF R5, AND CONNECT A MAGWIRE. CONNECT OTHER END OF MAGWIRE TO THE END OF R4 THAT CONNECTS TO FEEDTHRU.

NOTES:
1. POST COATING FOR BOTH SIDES OF P.C. BOARD NOT REQUIRED
2. PRINTED CIRCUIT ASSEMBLY IDENTIFICATION MUST BE IN ACCORDANCE WITH SPEC. 001-01101-0000.
3. LIQUID STAKE ALL FASTENERS PER SPEC. 001-01060-0000
4. Q2 AND R3 ARE NOT INSTALLED
5. SLIDE ITEM 5 OVER EACH LEAD OF V1. CUT LENGTH FOR ITEM 5 IS .72 +/- .03. AFTER SOLDERING IN BOARD, FORM LEADS AS SHOWN IN VIEW A-A.
6. LOCATE ITEM 7 OVER PHOTO CELL AS SHOWN IN VIEW A-A. EDGE OF ITEM 7 FLUSH WITH FACE OF PHOTO CELL.

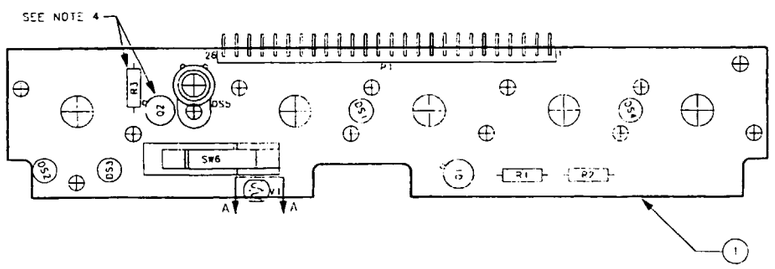


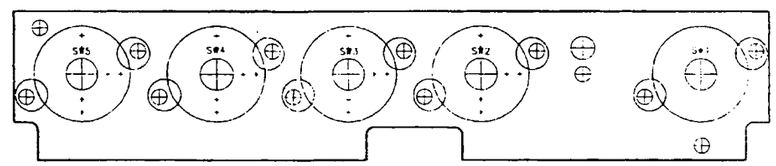


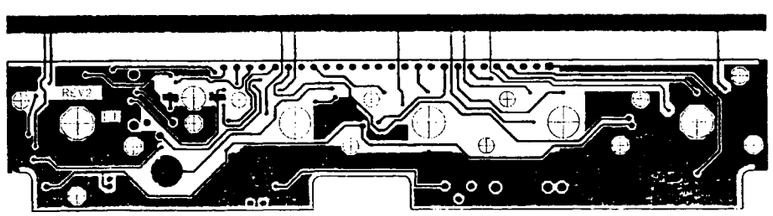


NEARSIDE VIEW OF PC BOARD

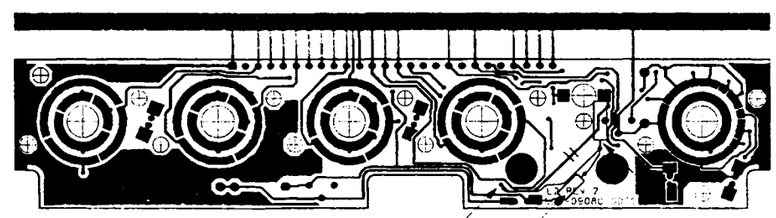

FARSIDE VIEW OF PC BOARD

R5
SEE REWORK NOTE D

SEE REWORK NOTES A, B, C

NOTE: ANY FILL AREAS ON THE TRACE LAYER SHOWN MAY NOT REPRESENT FINAL ARTWORK AS THERMAL RELIEFS MAY NOT BE SHOWN

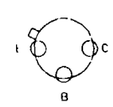


TOP SIDE:
Q1
Q2 (NOT INSTALLED)

**FIGURE 6-20 KT 76A Switch Board (S/N ≥110,000)**
**(Dwg. No. 300-09080-0000 R-AA), Sheet 1 of 2**

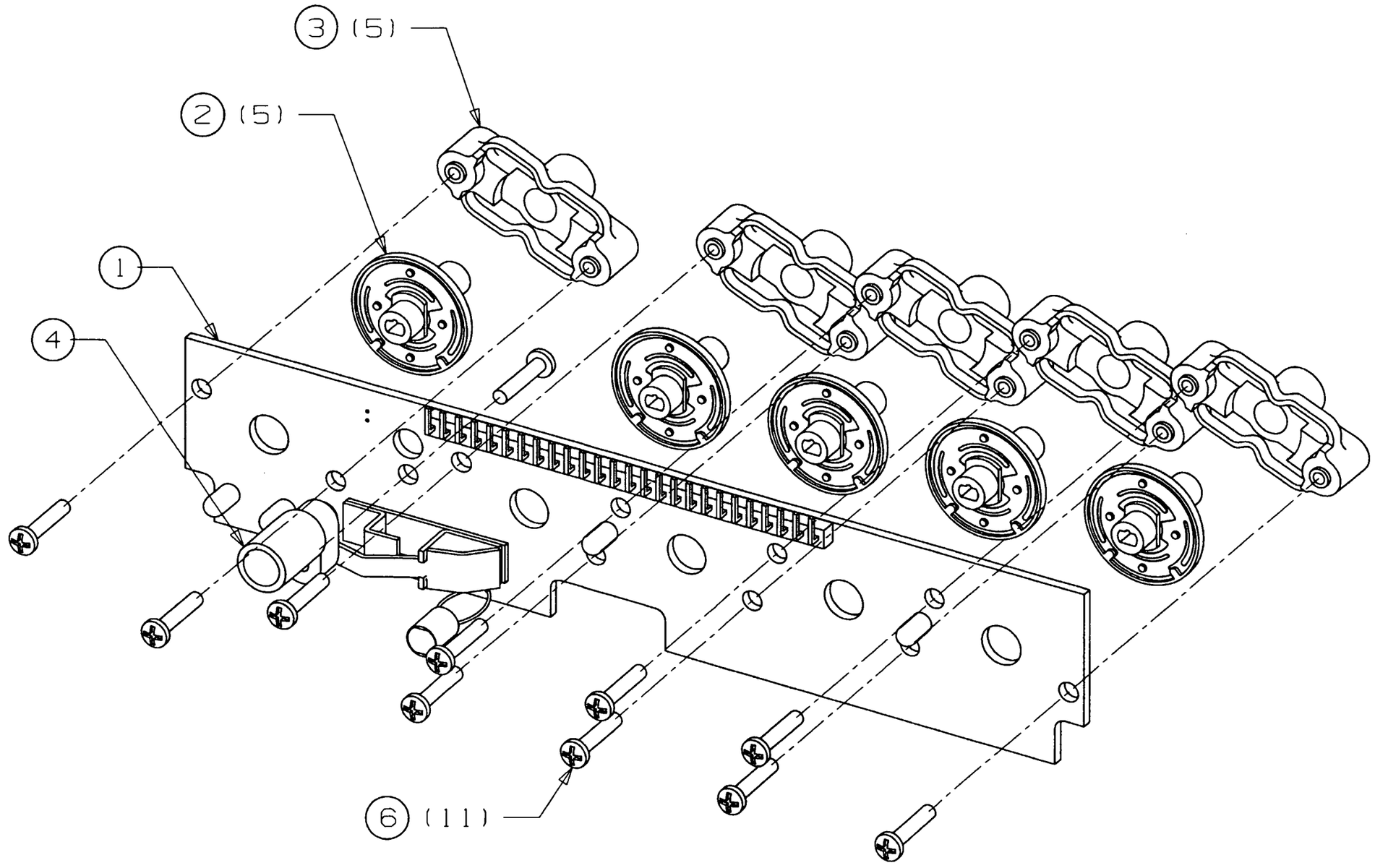


**FIGURE 6-20 KT 76A Switch Board (S/N ≥110,000)**
**(Dwg. No. 300-09080-0000 R-AA), Sheet 2 of 2**

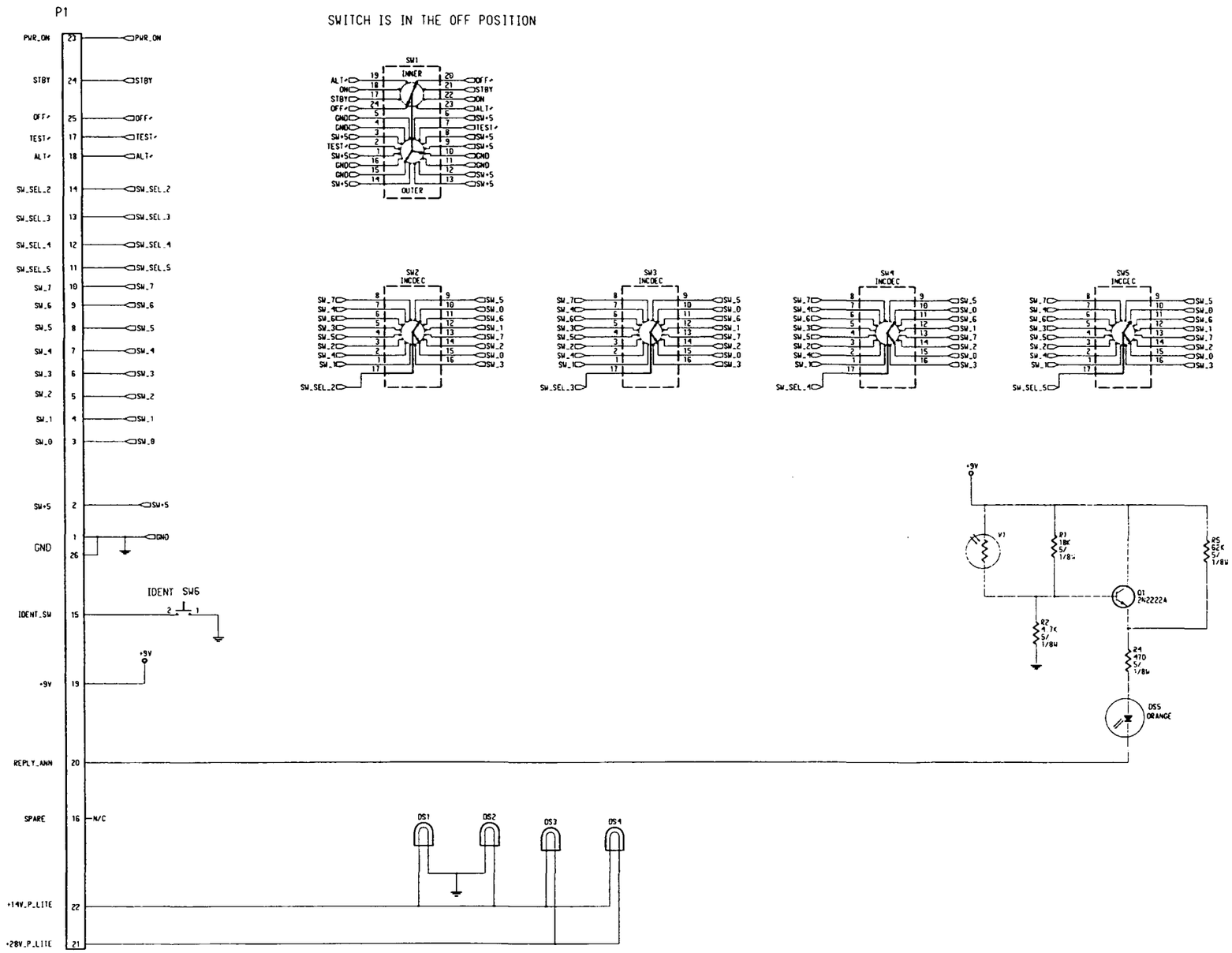


**FIGURE 6-21 KT 76A Switch Board Schematic (S/N ≥120,800)**
**(Dwg. No. 300-09080-0020 R--)**

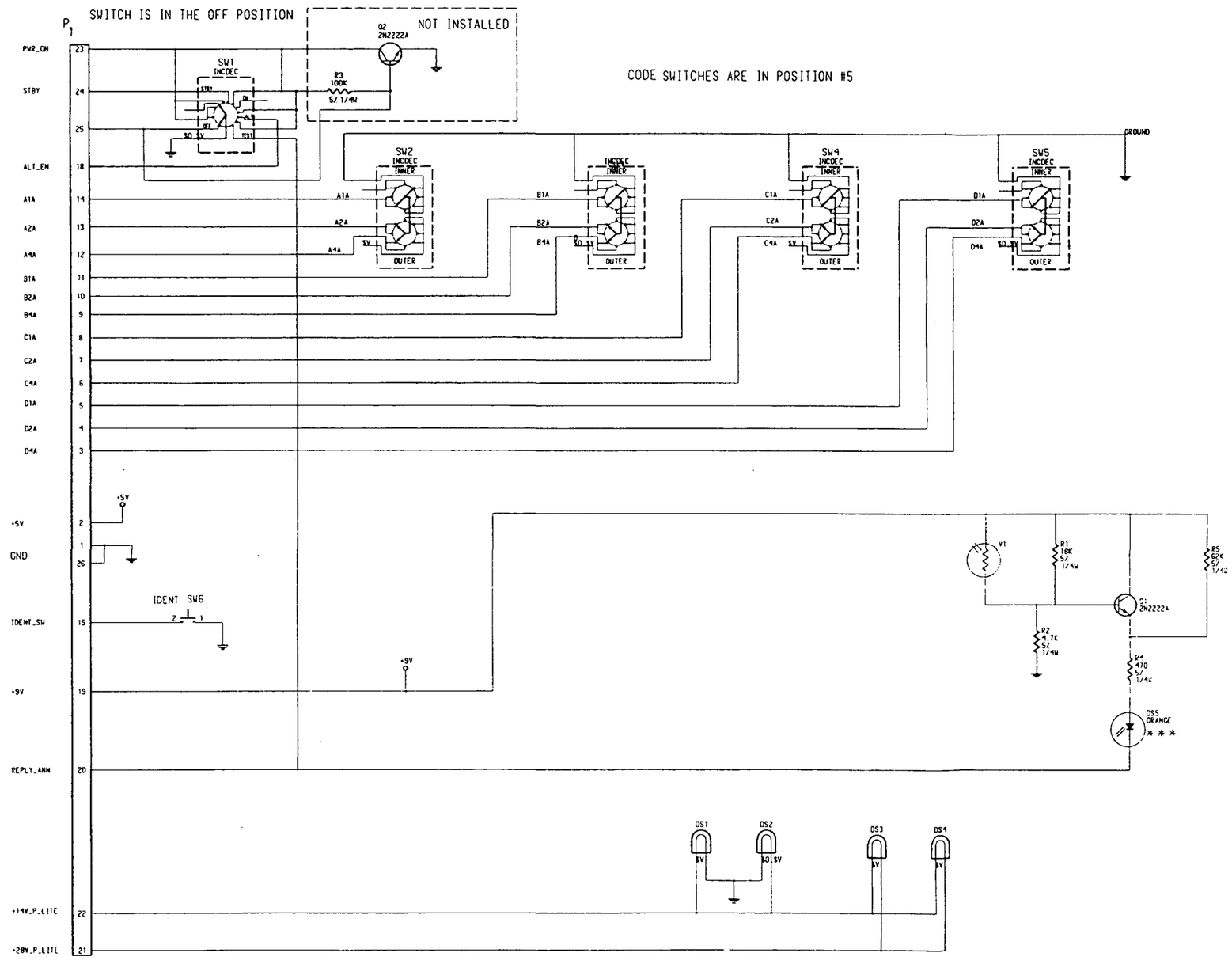


**FIGURE 6-22 KT 76A Switch Board (S/N ≥110,000)**
**(Dwg. No. 002-09080-0000 R-AA)**

## 6.7 200-00381-0000 Rev. 15 SWITCH BOARD ASSY
## 200-00381-0001 Rev. 16 SWITCH BOARD ASSY

| SYMBOL | PART NUMBER | DESCRIPTION | UM | QUANTITY | |
|---|---|---|---|---|---|
| | | | | -0001 | -0001 |
| | 012-01002-0000 | TAPE .250W | [IN] | 1.2 | 1.2 |
| | 026-00001-0000 | WIRE COP TIN 26G | [IN] | 4.8 | 4.8 |
| | 033-00051-0000 | SCKT SNGL PC BD | [EA] | 8 | 2 |
| | 047-01102-0000 | CONTACT SPRING | [EA] | 1 | 1 |
| | 047-02427-0000 | CNTCT PLT | [EA] | 1 | 1 |
| | 047-03965-0001 | CONTACT LAMP W/F | [EA] | 1 | 1 |
| | 057-01425-0000 | DECAL LAMP VOLTAGE | [EA] | 1 | |
| | 076-00301-0011 | SPACER .093 | [EA] | 2 | 2 |
| | 088-00136-0005 | FLTR LAMP LT BLUE | [EA] | 1 | |
| | 088-00275-0000 | RTNR BULB | [EA] | 1 | 1 |
| | 089-02005-0037 | NUT FLAT 2-56 | [EA] | 2 | 2 |
| | 089-05899-0005 | SCR PHP #2-56X5/16 | [EA] | 2 | 2 |
| | 089-06293-0004 | SCR PHP 3-48X1/4 | [EA] | 1 | 1 |
| | 089-08023-0030 | WSHR FLT STD #2 | [EA] | 2 | 2 |
| | 150-00003-0010 | TUBING TFLN 24AWG | [IN] | 4.8 | 4.8 |
| DS 301 | 037-00025-0000 | LMP 2182 T1-3/4 14 | [EA] | 1 | 1 |
| DS 302 | 037-00007-0001 | LMP 8918 T1-3/4 14 | [EA] | 1 | 1 |
| DS 303 | 037-00007-0001 | LMP 8918 T1-3/4 14 | [EA] | 1 | 1 |
| Q 301 | 007-00035-0000 | XSTR S NPN 2N3415 | [EA] | 1 | 1 |
| R 301 | 131-00183-0023 | RES CF 18K QW 5% | [EA] | 1 | 1 |
| R 302 | 131-00103-0023 | RES CF 10K QW 5% | [EA] | 1 | 1 |
| S 301 | 031-00173-0000 | SWITCH PB NO | [EA] | 1 | 1 |
| S 302 | 031-00175-0000 | SWITCH ASSY | [EA] | 1 | 1 |
| V 301 | 134-05005-0002 | PHOTODETECTOR | [EA] | 1 | 1 |
| REF 1 | 300-00516-0000 | SWITCH BOARD ASSY. | [RF] | X | |
| REF 1 | 300-00516-0001 | SWITCH BOARD ASSY. | [RF] | | X |

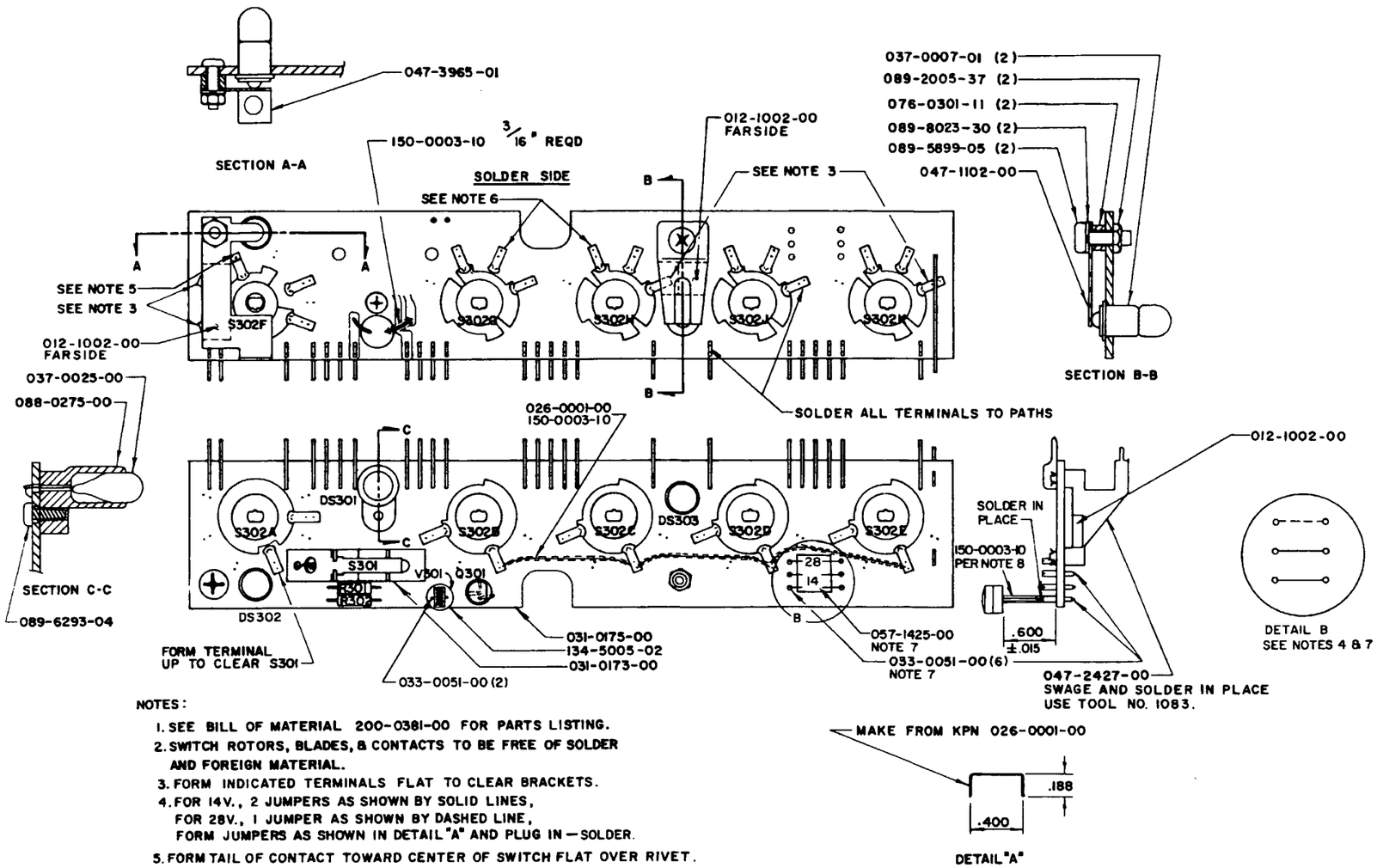


NOTES:

1. SEE BILL OF MATERIAL 200-0381-00 FOR PARTS LISTING.
2. SWITCH ROTORS, BLADES, & CONTACTS TO BE FREE OF SOLDER AND FOREIGN MATERIAL.
3. FORM INDICATED TERMINALS FLAT TO CLEAR BRACKETS.
4. FOR 14V., 2 JUMPERS AS SHOWN BY SOLID LINES, FOR 28V., 1 JUMPER AS SHOWN BY DASHED LINE, FORM JUMPERS AS SHOWN IN DETAIL "A" AND PLUG IN—SOLDER.
5. FORM TAIL OF CONTACT TOWARD CENTER OF SWITCH FLAT OVER RIVET.
6. CLIP TAIL OF CONTACT.
7. VOLTAGE DECAL (057-1425-00) AND SOCKETS (033-0051-00) ARE NOT USED ON -01 ASSEMBLY. ONE JUMPER SOLDERED DIRECTLY TO BOARD AS SHOWN BY DASHED LINE IN DETAIL B.
8. INSTALL 150-0003-10 TUBING ON ONE LEAD OF V301.
9. LEAVE FLUX INTACT ON ALL SOLDER CONNECTIONS ON SWITCH BOARD (031-0175-00). DO NOT ALLOW SOLVENT TO COME IN CONTACT WITH SWITCH BOARD. DO NOT ATTEMPT TO CLEAN CONTACT SURFACES OR ROTORS OF SWITCHES.

**FIGURE 6-23 KT 76A Switch Board (S/N <110,000)**
**(Dwg. No. 300-00516-0000/-0001 R-15)**

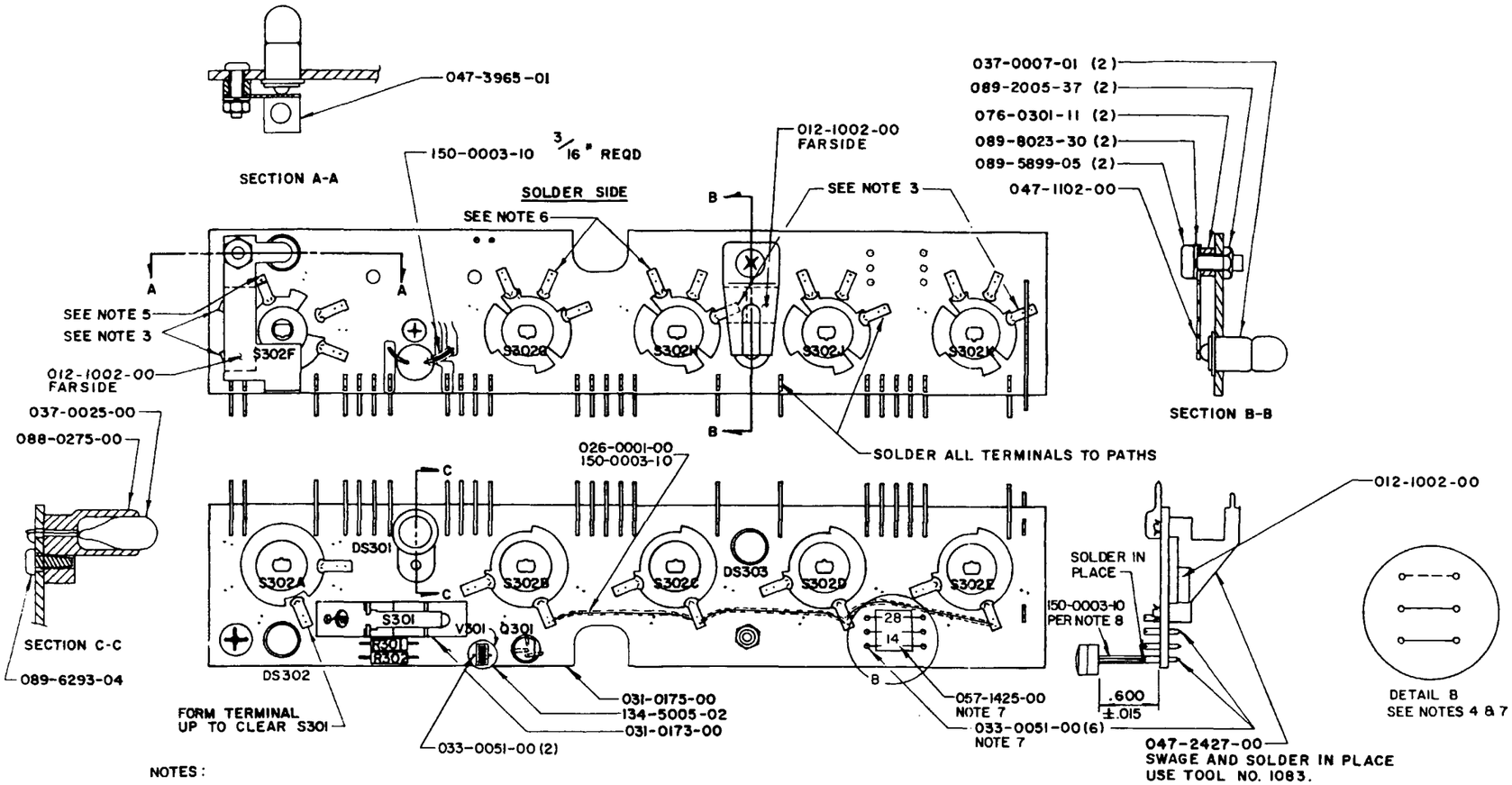


NOTES:

1. SEE BILL OF MATERIAL 200-0381-00 FOR PARTS LISTING.
2. SWITCH ROTORS, BLADES, & CONTACTS TO BE FREE OF SOLDER AND FOREIGN MATERIAL.
3. FORM INDICATED TERMINALS FLAT TO CLEAR BRACKETS.
4. FOR 14V., 2 JUMPERS AS SHOWN BY SOLID LINES, FOR 28V., 1 JUMPER AS SHOWN BY DASHED LINE, FORM JUMPERS AS SHOWN IN DETAIL "A" AND PLUG IN—SOLDER.
5. FORM TAIL OF CONTACT TOWARD CENTER OF SWITCH FLAT OVER RIVET.
6. CLIP TAIL OF CONTACT.
7. VOLTAGE DECAL (057-1425-00) AND SOCKETS (033-0051-00) ARE NOT USED ON -01 ASSEMBLY. ONE JUMPER SOLDERED DIRECTLY TO BOARD AS SHOWN BY DASHED LINE IN DETAIL B.
8. INSTALL 150-0003-10 TUBING ON ONE LEAD OF V301.

**FIGURE 6-23A KT 76A Switch Board (S/N <110,000)**
**(Dwg. No. 300-00516-0000/-0001 R-14)**

## 6.8 200-02019-0000 Rev. 19 CHASSIS ASSY
## 200-02019-0001 Rev. 18 CHASSIS ASSY
## 200-02019-0010 Rev. AB CHASSIS ASSY
## 200-02019-0020 Rev. A CHASSIS ASSY

| SYMBOL | EAS PART NBR | DESCRIPTION | [UOM] | -0000 | -0001 | -0010 | -0020 |
|---|---|---|---|---|---|---|---|
| _ | 008-00005-0001 | TND COP LUG | [EA] | 1 | 1 | | |
| _ | 008-00048-0001 | SLDRLS PIN & RECPT | [EA] | 6 | 6 | | |
| _ | 009-00003-0010 | TRML STRP MINI 2T | [EA] | 1 | 1 | | |
| _ | 012-01002-0001 | TAPE .500W | [IN] | 1.2 | 1.2 | | |
| _ | 012-01005-0005 | TAPE MYLAR 1 W | [IN] | 1.4 | 1.4 | | |
| _ | 013-00031-0000 | FERR BEAD W/INS | [EA] | 1 | 1 | | |
| _ | 016-01010-0000 | GLYP HV RED 13402 | [AR] | 0 | 0 | | |
| _ | 024-00012-0001 | CA-RG188A/U (MOD)DBL S | [IN] | 6 | 6 | | |
| _ | 025-00003-0000 | WIRE 22 BLK | [IN] | 1.2 | 1.2 | | |
| _ | 025-00003-0002 | WIRE 22 RED | [IN] | 9.6 | 9.6 | | |
| _ | 025-00003-0005 | WIRE 22 GRN | [IN] | 6 | 6 | | |
| _ | 025-05005-0099 | WIRE 24G WHT | [IN] | 6 | 6 | | |
| _ | 047-02432-0000 | SPREADER | [EA] | 1 | 1 | | |
| _ | 047-02602-0000 | COVER OSC | [EA] | 1 | 1 | | |
| _ | 047-03964-0002 | BTM CVR CHAS W/HDW | [EA] | 1 | 1 | | |
| _ | 057-01540-0000 | WARNING HV TAG | [EA] | 1 | 1 | | |
| _ | 057-02020-0000 | WARNING TAG | [EA] | 1 | 1 | | |
| _ | 073-00379-0006 | HOLD DOWN UNIT | [EA] | 1 | 1 | | |
| _ | 075-00045-0002 | FINISHED EXT | [EA] | 1 | 1 | | |
| _ | 089-02140-0000 | NUT LOCK 4-40 | [EA] | 1 | 1 | | |
| _ | 089-06293-0003 | SCR PHP 3-48X3/16 | [EA] | 21 | 2 | | |
| _ | 089-06293-0004 | SCR PHP 3-48X1/4 | [EA] | 4 | 23 | | |
| _ | 089-06561-0000 | SCR SHC 6-32X1.140 | [EA] | 1 | 1 | | |
| _ | 089-08024-0030 | WSHR FLT STD #3 | [EA] | 1 | 1 | | |
| _ | 089-08231-0000 | WASHER FLAT | [EA] | 1 | 1 | | |
| _ | 090-00265-0000 | PIN GRO .046X.250 | [EA] | 1 | 1 | | |
| _ | 150-00020-0010 | TUBING SHRINK 18G | [IN] | 3.6 | 3.6 | | |
| _ | 150-00048-0010 | SHRNK TUBING WHT | [IN] | 1.2 | 1.2 | | |
| _ | 200-02021-0000 | PRESELECTOR | [EA] | 1 | 1 | | |
| ITM 1 | 047-11071-0023 | TOP FRAME, FINISH | [EA] | | | 1 | |
| ITM 1 | 047-11071-0024 | TOP FRAME, FINISH | [EA] | | | | 1 |
| ITM 2 | 012-01652-0001 | INSULATOR, BOX | [EA] | | | 1 | 1 |
| ITM 3 | 200-05669-0000 | FILTER/HTSNK ASSY | [EA] | | | 1 | 1 |

| SYMBOL | EAS PART NBR | DESCRIPTION | [UOM] | -0000 | -0001 | -0010 | -0020 |
|---|---|---|---|---|---|---|---|
| ITM 4 | 200-09070-0000 | KT76A MAIN BD | [EA] | | | 1 | |
| ITM 4 | 200-09070-0020 | KT 76A MAIN BD ASSEMBL | [EA] | | | | 1 |
| ITM 5 | 091-00156-0000 | BUSHING | [EA] | | | 2 | |
| ITM 5 | 091-00187-0000 | SHOULDER WASHER | [EA] | | | | 2 |
| ITM 6 | 089-02136-0000 | NUT LOCK 2-56 | [EA] | | | | 2 |
| ITM 6 | 089-08065-0030 | WSHR FLT STD .128 | [EA] | | | 2 | |
| ITM 7 | 021-00038-0000 | TUBE OSC | [EA] | | | 1 | 1 |
| ITM 8 | 155-02863-0001 | CABLE ASSY | [EA] | | | 1 | 1 |
| ITM 9 | 019-02084-0000 | CH .15UH 5% | [EA] | | | 1 | 1 |
| ITM 10 | 047-11072-0002 | TUBE RETAINER | [EA] | | | 1 | 1 |
| ITM 11 | 057-01540-0000 | WARNING HV TAG | [EA] | | | 1 | 1 |
| ITM 12 | 089-05878-0004 | SCR PHP 4-40X1/4 | [EA] | | | | 4 |
| ITM 12 | 089-05878-0005 | SCR PHP 4-40X5/16 | [EA] | | | 5 | |
| ITM 14 | 057-01589-0000 | VOLTAGE PLATE | [EA] | | | 1 | 1 |
| ITM 15 | 057-03511-0001 | """DECAL, CAUTION """ | [EA] | | | 1 | 1 |
| ITM 16 | 091-00581-0003 | INSUL XSTR .687 | [EA] | | | 2 | 2 |
| ITM 17 | 016-01013-0000 | VAC GREASE DC 976 | [AR] | | | 1 | 1 |
| ITM 18 | 089-06004-0004 | SCR FHP 2-56X1/4 | [EA] | | | | 2 |
| L 101 | 019-02055-0006 | CH RF .15UH 10% | [EA] | 1 | 1 | | |
| L 102 | 019-02084-0024 | CH 1.5UH 5% | [EA] | 1 | 1 | | |
| V 101 | 050-01564-0002 | CAVITY KIT-CLASS 1 | [EA] | 1 | | | |
| V 101 | 050-01565-0002 | CAVITY KIT-CLS | [EA] | | 1 | | |
| REF 1 | 300-02019-0000 | CHASSIS ASSY. | [RF] | X | X | | |
| REF 1 | 300-02019-0020 | CHASSIS ASSY. | [RF] | | | | X |

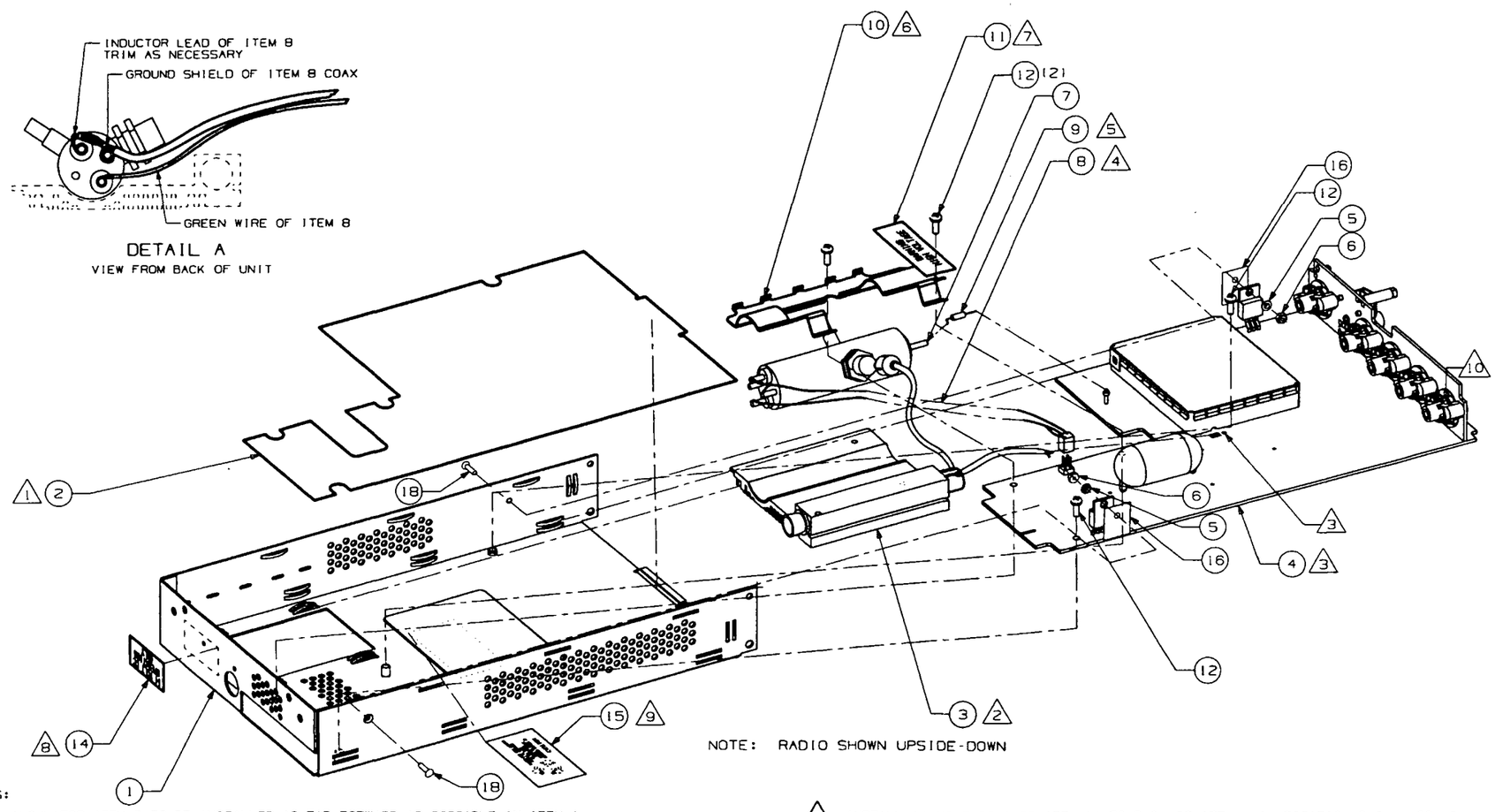


NOTES:

1. INSULATOR ITEM 2 TO BE INSTALLED AS FAR FORWARD AS POSSIBLE IN ITEM 1.
2. TO INSTALL FILTER ASSY ITEM 3, SLIDE FROM FRONT TO BACK INTO HOLD-DOWNS GROOVES OF ITEM 1.
3. ITEM 4 BOARD ASSEMBLIES TO BE SLID INTO HOLD-DOWN GROOVES OF ITEM 1 FROM THE FRONT. TO GET THE SWITCH BOARD INTO ITS VERTICAL GROOVES, THE BOX ITEM 1 NEEDS TO BE "SPRUNG" OPEN JUST SLIGHTLY WHILE THE BOARD ASSY IS PUSHED BACK TO ITS FINAL POSITION. SOLDER CENTER CONDUCTOR OF COAX ON FILTER ASSY ITEM 3 TO PAD "E2" OF BOARD ITEM 4. BREAK-OUT SHIELD CABLE OF COAX AND SOLDER IT TO GROUND PAD BESIDE E2 ON BOARD ITEM 4.
4. INSTALL CABLE ASSY ITEM 8 TO CAVITY OSCILLATOR ITEM 7, SOLDERING WIRES TO TERMINALS AS SHOWN IN "DETAIL A." PIN OF CONNECTOR SHOULD ALREADY BE CLIPPED TO KEY CONNECTOR TO ITEM 8.
5. SOLDER INDUCTOR ITEM 9 TO SINGLE TERMINAL OF CAVITY OSCILLATOR ITEM 7, OTHER END OF ITEM 9 TO TERMINAL J4 ON BOARD ITEM 4. TRIM LEADS AS NECESSARY.
6. TO INSTALL TUBE RETAINER, ITEM 10, CATCH FIVE TABS INTO SLOTS ON THE SIDE OF BOX ITEM 1, PLACE THE SCREWS ITEMS 12 INTO THE HOLES OF TUBE RETAINER AND "SPRING" THEM DOWN OVER TUBE ITEM 7 TO THREAD THEM INTO ITEM 1.
7. INSTALL WARNING STICKER ITEM 11 ONTO TUBE RETAINER ITEM 10; BOTTOM EDGE OF STICKER TO BE APPROXIMATELY EVEN WITH FORWARD EDGE OF TUBE RETAINER; CENTER STICKER ON PROTRUSION AND WRAP ENDS OF STICKER AROUND EDGES OF TUBE RETAINER IF NECESSARY.
8. INSTALL 14 VOLT STICKER ITEM 14 TO BACK OF ITEM 1 IN POSITION SHOWN, SO AS TO NOT BLOCK ANY GUIDE-PIN OR SCREW HOLES OF ITEM 1.
9. INSTALL ESD STICKER ITEM 15 IN APPROXIMATE CENTER OF TOP FRAME ITEM 1.
10. APPLY VERY SMALL AMOUNT OF GREASE, ITEM 17, TO 1 LOBE OF EACH SWITCH.

**FIGURE 6-24 KT 76A Chassis Assy (S/N ≥120,800)**
**(Dwg. No. 300-02019-0020 R-A)**

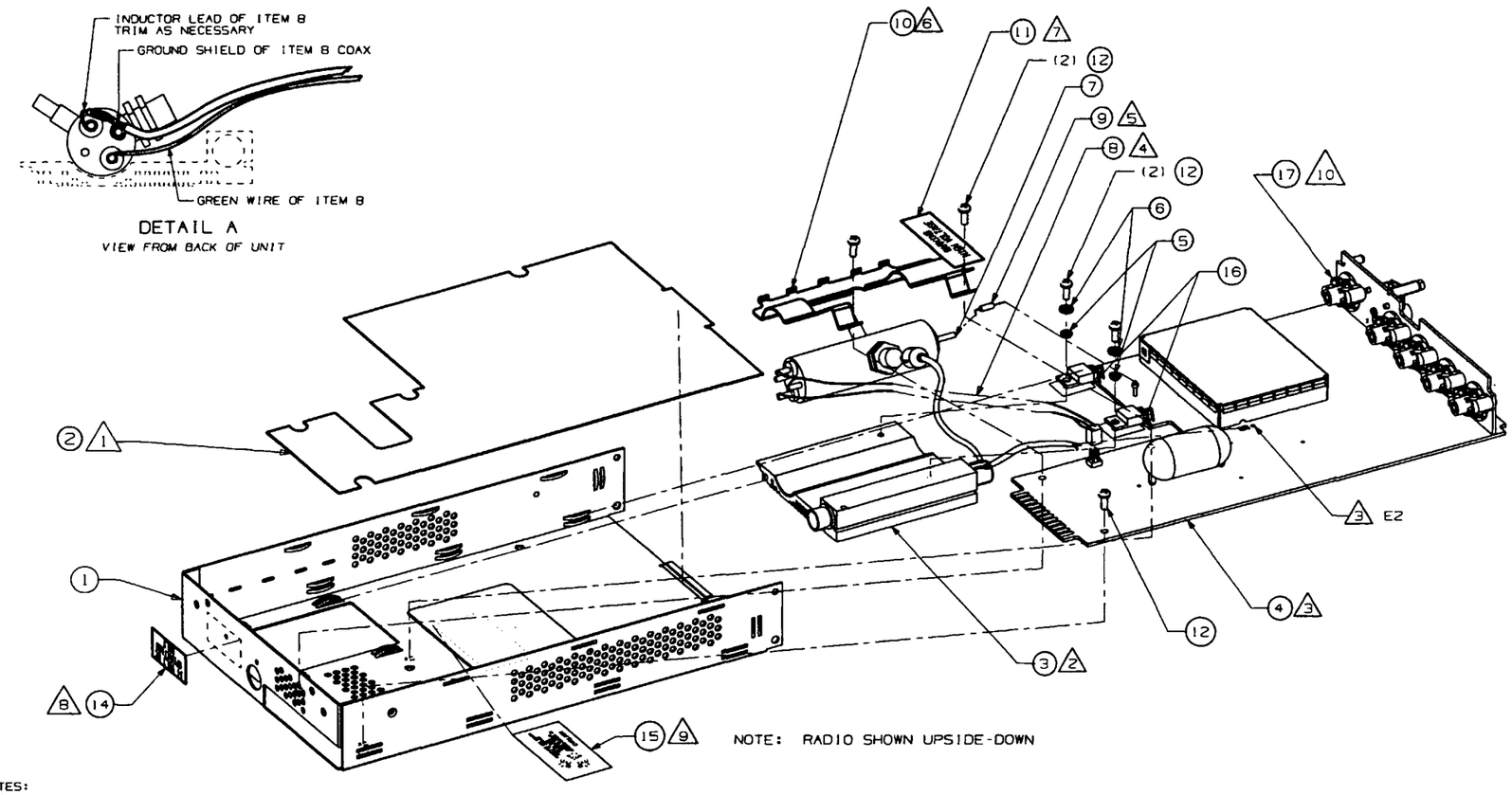


NOTES:

1. INSULATOR ITEM 2 TO BE INSTALLED AS FAR FORWARD AS POSSIBLE IN ITEM 1.
2. TO INSTALL FILTER ASSY ITEM 3, SLIDE FROM FRONT TO BACK INTO HOLD-DOWNS GROOVES OF ITEM 1.
3. ITEM 4 BOARD ASSEMBLIES TO BE SLID INTO HOLD-DOWN GROOVES OF ITEM 1 FROM THE FRONT. TO GET THE SWITCH BOARD INTO ITS VERTICAL GROOVES, THE BOX ITEM 1 NEEDS TO BE "SPRUNG" OPEN JUST SLIGHTLY WHILE THE BOARD ASSY IS PUSHED BACK TO ITS FINAL POSITION. SOLDER CENTER CONDUCTOR OF COAX ON FILTER ASSY ITEM 3 TO PAD "E2" OF BOARD ITEM 4. BREAK-OUT SHIELD CABLE OF COAX AND SOLDER IT TO GROUND PAD BESIDE E2 ON BOARD ITEM 4.
4. INSTALL CABLE ASSY ITEM 8 TO CAVITY OSCILLATOR ITEM 7, SOLDERING WIRES TO TERMINALS AS SHOWN IN "DETAIL A." PIN OF CONNECTOR SHOULD ALREADY BE CLIPPED TO KEY CONNECTOR TO ITEM 8.
5. SOLDER INDUCTOR ITEM 9 TO SINGLE TERMINAL OF CAVITY OSCILLATOR ITEM 7, OTHER END OF ITEM 9 TO TERMINAL J4 ON BOARD ITEM 4. TRIM LEADS AS NECESSARY.
6. TO INSTALL TUBE RETAINER SPRING ITEM 10, CATCH FIVE TABS INTO SLOTS ON THE SIDE OF BOX ITEM 1. PLACE THE SCREWS ITEMS 12 INTO THE HOLES OF SPRING AND "SPRING" THEM DOWN OVER TUBE ITEM 7 TO THREAD THEM INTO ITEM 1.
7. INSTALL WARNING STICKER ITEM 11 ONTO SPRING ITEM 10; BOTTOM EDGE OF STICKER TO BE APPROXIMATELY EVEN WITH FORWARD EDGE OF SPRING; CENTER STICKER ON PROTRUSION AND WRAP ENDS OF STICKER AROUND EDGES OF SPRING IF NECESSARY.
8. INSTALL 14 VOLT STICKER ITEM 14 TO BACK OF ITEM 1 IN POSITION SHOWN, SO AS TO NOT BLOCK ANY GUIDE-PIN OR SCREW HOLES OF ITEM 1.
9. INSTALL ESD STICKER ITEM 15 IN APPROXIMATE CENTER OF TOP FRAME ITEM 1.
10. APPLY VERY SMALL AMOUNT OF GREASE, ITEM 17, TO 1 LOBE OF EACH SWITCH.

**FIGURE 6-25 KT 76A Chassis Assy (S/N ≥110,000)**
**(Dwg. No. 300-02019-0010 R-AC)**

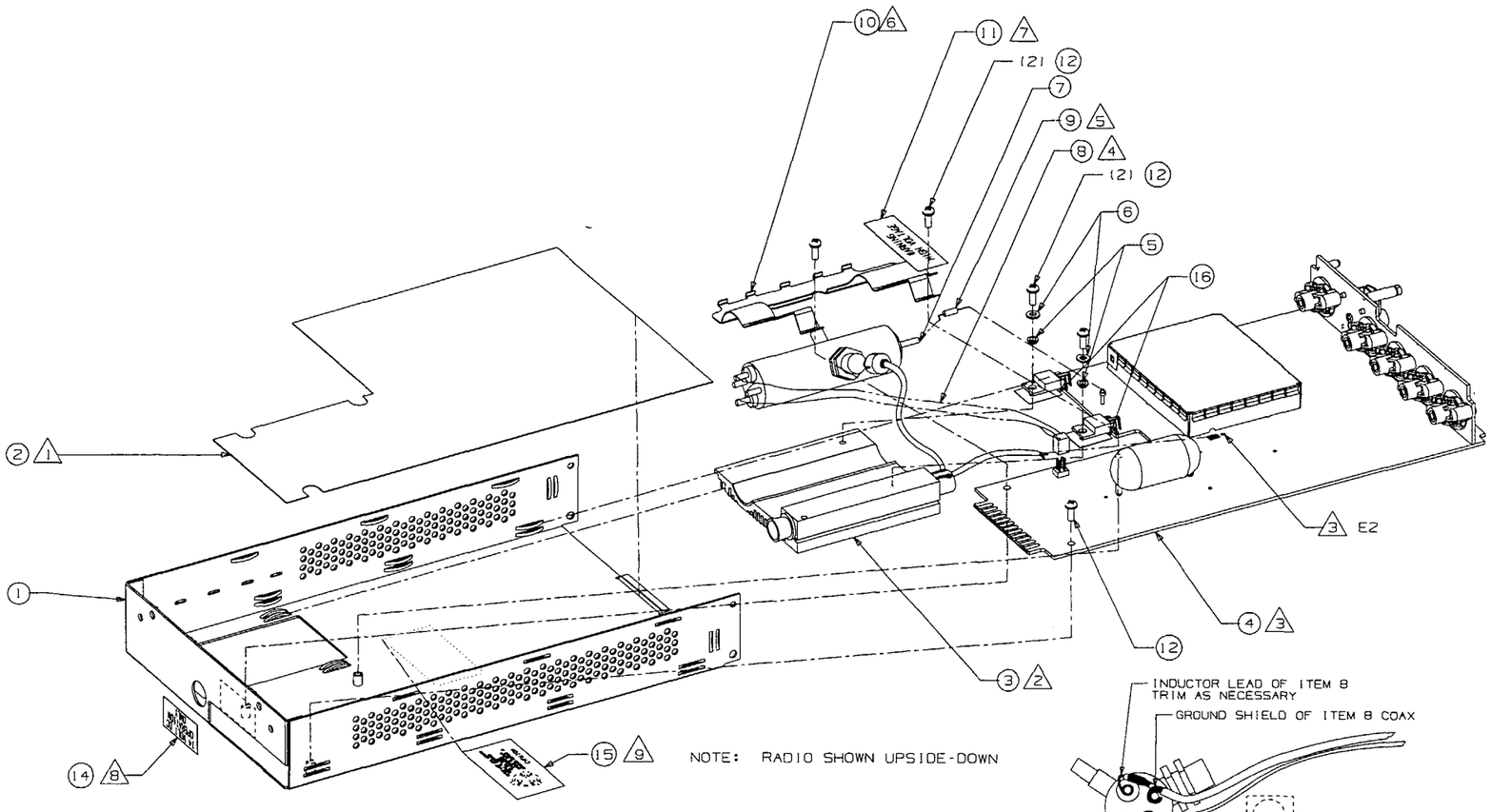


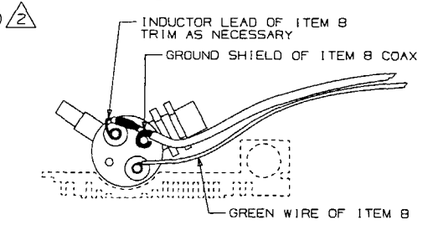


DETAIL A
VIEW FROM BACK OF UNIT

NOTES:

1. INSULATOR ITEM 2 TO BE INSTALLED AS FAR FORWARD AS POSSIBLE IN ITEM 1.
2. TO INSTALL FILTER ASSY ITEM 3, SLIDE FROM FRONT TO BACK INTO HOLD-DOWNS GROOVES OF ITEM 1.
3. *ITEM 4 BOARD ASSEMBLIES TO BE SLID INTO HOLD-DOWN GROOVES OF ITEM 1 FROM THE FRONT.* TO GET THE SWITCH BOARD INTO ITS VERTICAL GROOVES, THE BOX ITEM 1 NEEDS TO BE "SPRUNG" OPEN JUST SLIGHTLY WHILE THE BOARD ASSY IS PUSHED BACK TO ITS FINAL POSITION. SOLDER CENTER CONDUCTOR OF COAX ON FILTER ASSY ITEM 3 TO PAD "E2" OF BOARD ITEM 4. BREAK-OUT SHIELD CABLE OF COAX AND SOLDER IT TO GROUND PAD BESIDE E2 ON BOARD ITEM 4.
4. INSTALL CABLE ASSY ITEM 8 TO CAVITY OSCILLATOR ITEM 7, SOLDERING WIRES TO TERMINALS AS SHOWN IN "DETAIL A." PIN OF CONNECTOR SHOULD ALREADY BE CLIPPED TO KEY CONNECTOR TO ITEM 8.
5. SOLDER INDUCTOR ITEM 9 TO SINGLE TERMINAL OF CAVITY OSCILLATOR ITEM 7, OTHER END OF ITEM 9 TO TERMINAL J4 ON BOARD ITEM 4. TRIM LEADS AS NECESSARY.
6. TO INSTALL TUBE RETAINER SPRING ITEM 10, CATCH FIVE TABS INTO SLOTS ON THE SIDE OF BOX ITEM 1, PLACE THE SCREWS ITEMS 12 INTO THE HOLES OF SPRING AND "SPRING" THEM DOWN OVER TUBE ITEM 7 TO THREAD THEM INTO ITEM 1.
7. INSTALL WARNING STICKER ITEM 11 ONTO SPRING ITEM 10; BOTTOM EDGE OF STICKER TO BE APPROXIMATELY EVEN WITH FORWARD EDGE OF SPRING; CENTER STICKER ON PROTRUSION AND WRAP ENDS OF STICKER AROUND EDGES OF SPRING IF NECESSARY.
8. INSTALL 14 VOLT STICKER ITEM 14 TO BACK OF ITEM 1 IN POSITION SHOWN, SO AS TO NOT BLOCK ANY GUIDE-PIN OR SCREW HOLES OF ITEM 1.
9. INSTALL ESD STICKER ITEM 15 IN APPROXIMATE CENTER OF TOP FRAME ITEM 1.

THIS DRAWING NOT COMPLETE WITHOUT PARTS LIST 200-02019-0010.

300020190010R3S1

**FIGURE 6-25A KT 76A Chassis Assy (S/N ≥110,000)**
**(Dwg. No. 300-02019-0010 R-3)**

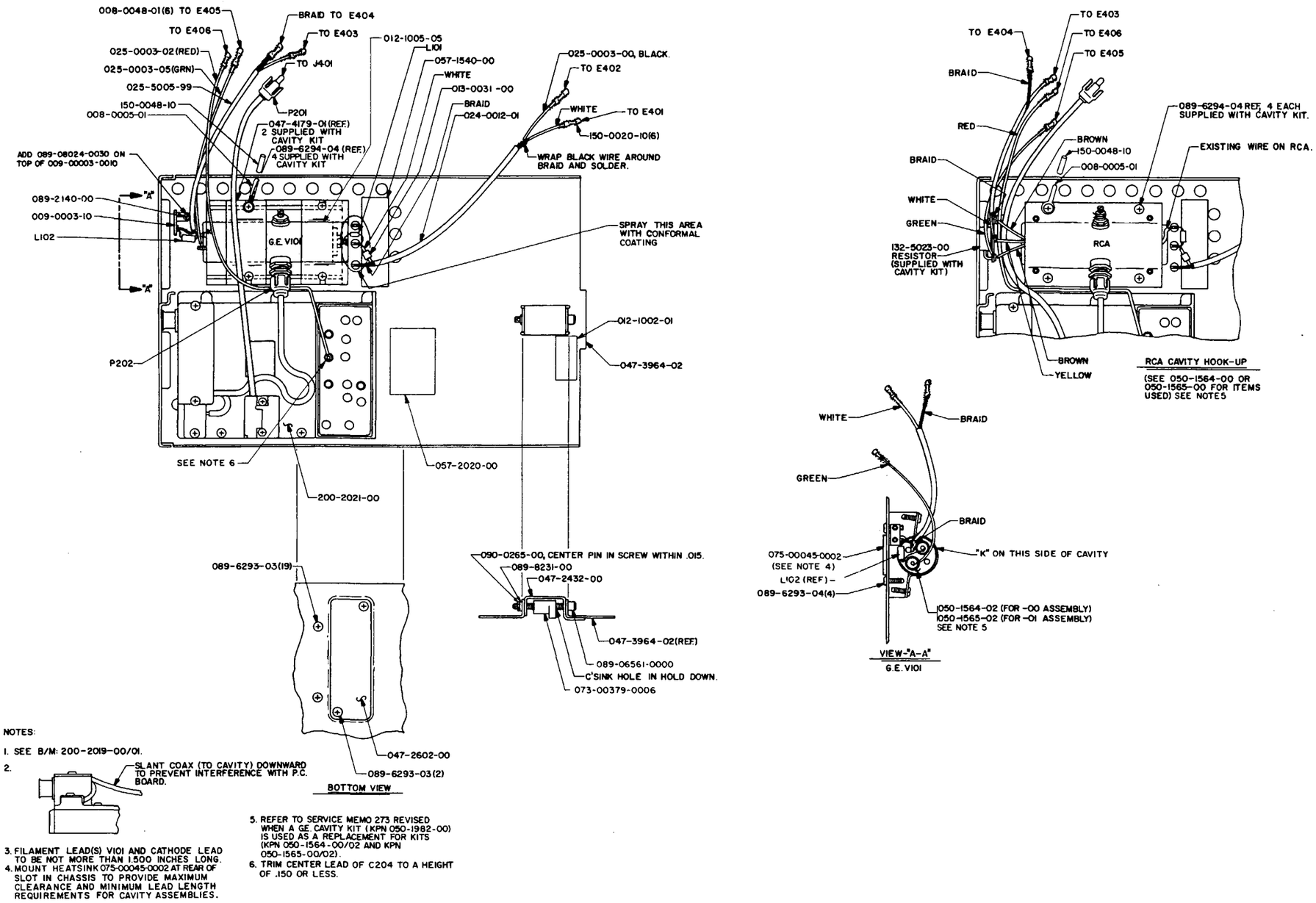


NOTES:

1. SEE B/M: 200-2019-00/01.
2. SLANT COAX (TO CAVITY) DOWNWARD TO PREVENT INTERFERENCE WITH P.C. BOARD.
3. FILAMENT LEAD(S) V101 AND CATHODE LEAD TO BE NOT MORE THAN 1.500 INCHES LONG.
4. MOUNT HEATSINK 075-00045-0002 AT REAR OF SLOT IN CHASSIS TO PROVIDE MAXIMUM CLEARANCE AND MINIMUM LEAD LENGTH REQUIREMENTS FOR CAVITY ASSEMBLIES.
5. REFER TO SERVICE MEMO 273 REVISED WHEN A GE CAVITY KIT (KPN 050-1982-00) IS USED AS A REPLACEMENT FOR KITS (KPN 050-1564-00/02 AND KPN 050-1565-00/02).
6. TRIM CENTER LEAD OF C204 TO A HEIGHT OF .150 OR LESS.

**FIGURE 6-26 KT 76A Chassis Assy (S/N <110,000)**
**(Dwg. No. 300-02019-0000 R-22)**

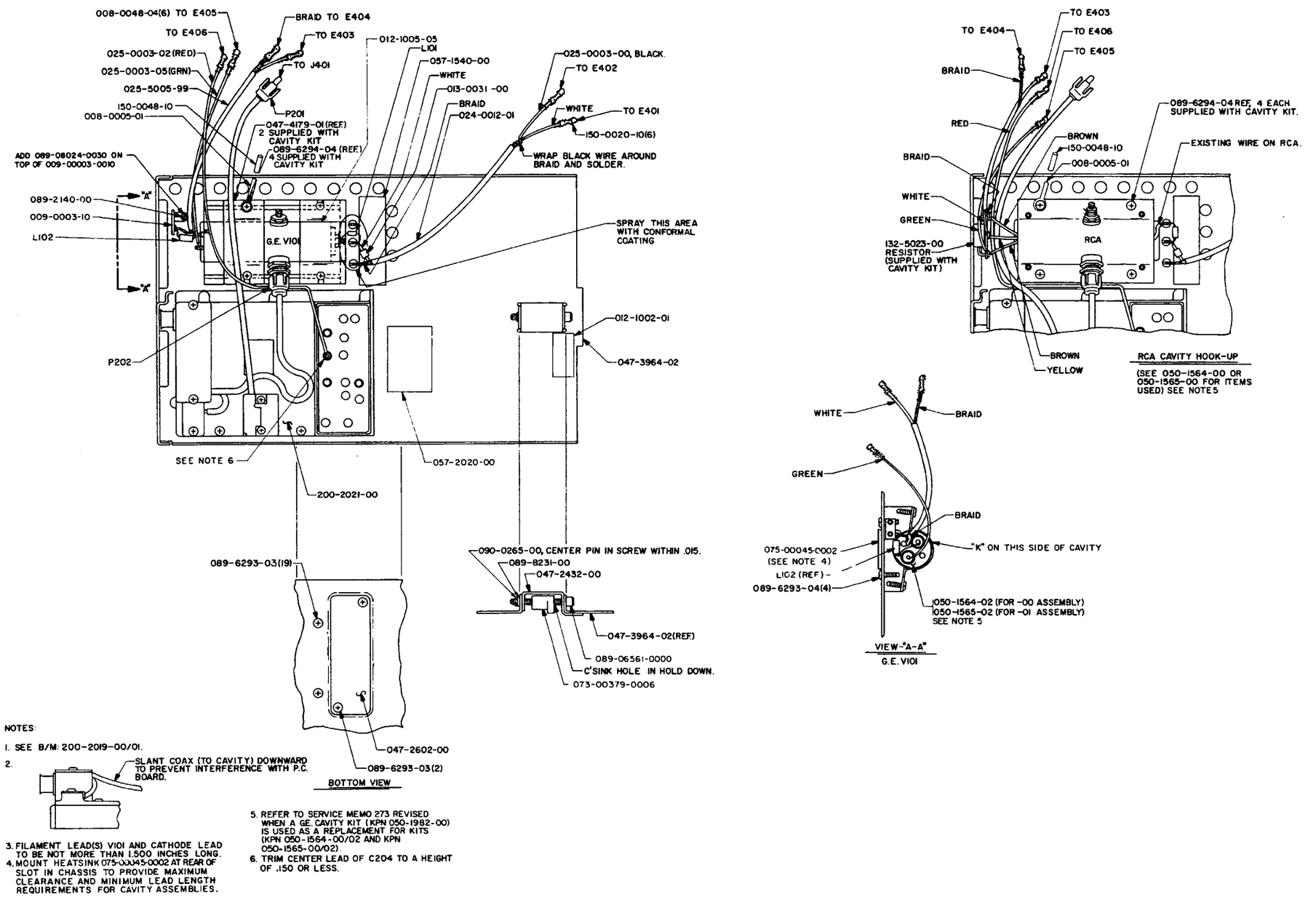


NOTES:

1. SEE B/M: 200-2019-00/01.
2. SLANT COAX (TO CAVITY) DOWNWARD TO PREVENT INTERFERENCE WITH P.C. BOARD.
3. FILAMENT LEAD(S) VIOI AND CATHODE LEAD TO BE NOT MORE THAN 1.500 INCHES LONG.
4. MOUNT HEATSINK 075-00045-0002 AT REAR OF SLOT IN CHASSIS TO PROVIDE MAXIMUM CLEARANCE AND MINIMUM LEAD LENGTH REQUIREMENTS FOR CAVITY ASSEMBLIES.
5. REFER TO SERVICE MEMO 273 REVISED WHEN A GE. CAVITY KIT (KPN 050-1982-00) IS USED AS A REPLACEMENT FOR KITS (KPN 050-1564-00/02 AND KPN 050-1565-00/02).
6. TRIM CENTER LEAD OF C204 TO A HEIGHT OF .150 OR LESS.

**FIGURE 6-26A KT 76A Chassis Assy (S/N <110,000)**
**(Dwg. No. 300-02019-0000 R-21)**

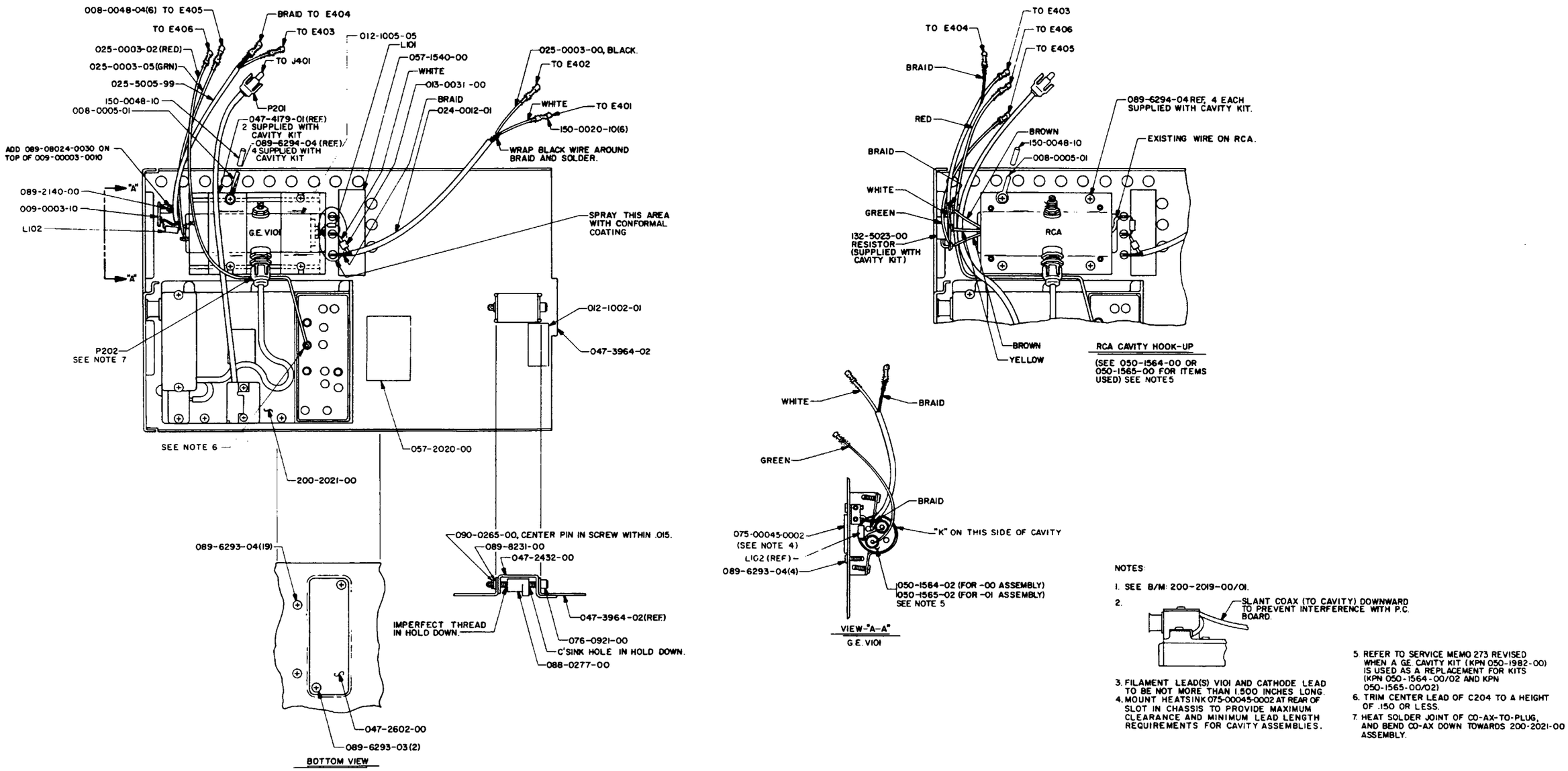


**FIGURE 6-26B KT 76A Chassis Assy (S/N <110,000)**
**(Dwg. No. 300-02019-0000 R-18)**

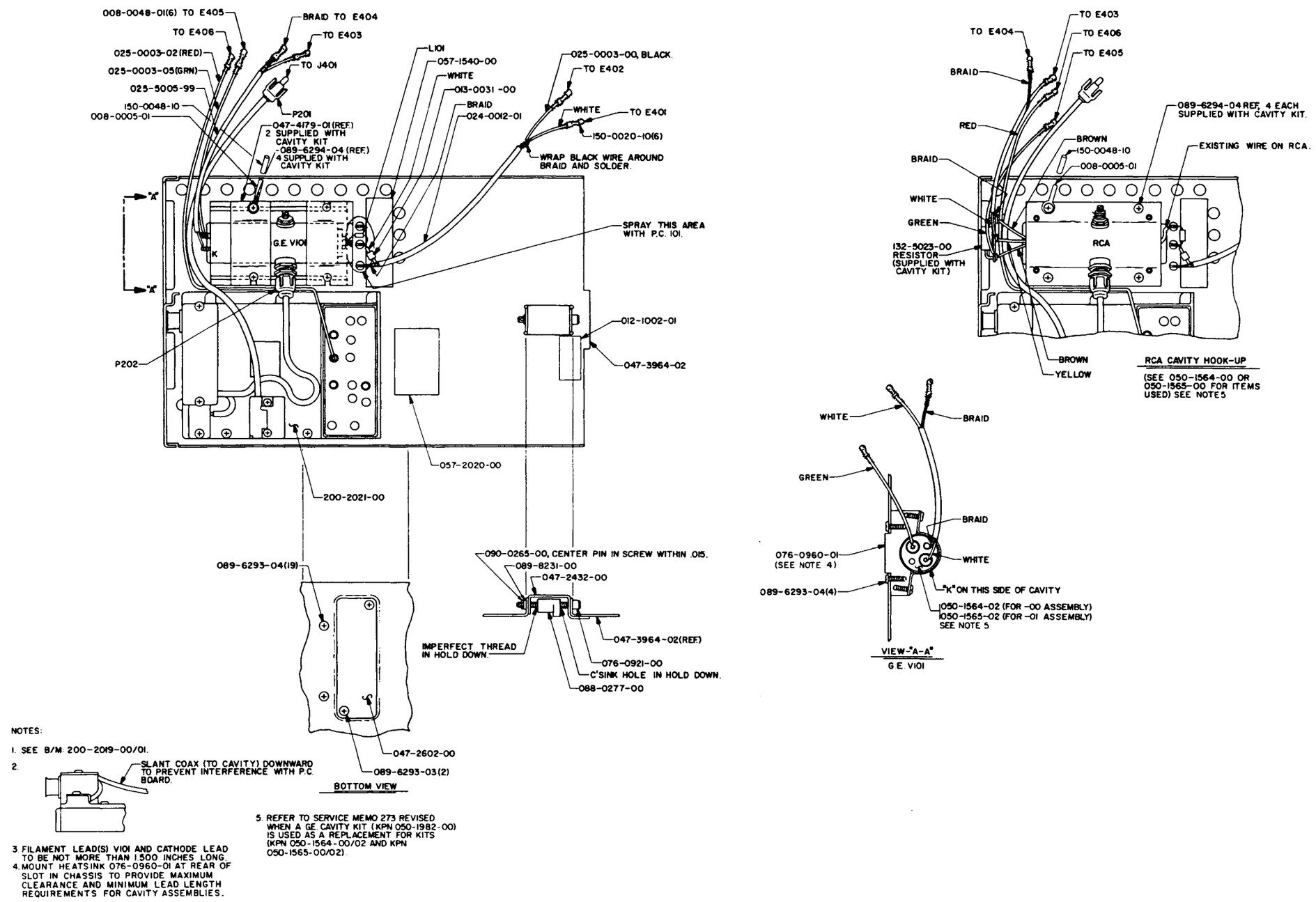


NOTES:

1. SEE B/M: 200-2019-00/01.
2. SLANT COAX (TO CAVITY) DOWNWARD TO PREVENT INTERFERENCE WITH P.C. BOARD.
3. FILAMENT LEAD(S) V101 AND CATHODE LEAD TO BE NOT MORE THAN 1.500 INCHES LONG.
4. MOUNT HEATSINK 076-0960-01 AT REAR OF SLOT IN CHASSIS TO PROVIDE MAXIMUM CLEARANCE AND MINIMUM LEAD LENGTH REQUIREMENTS FOR CAVITY ASSEMBLIES.
5. REFER TO SERVICE MEMO 273 REVISED WHEN A GE CAVITY KIT (KPN 050-1982-00) IS USED AS A REPLACEMENT FOR KITS (KPN 050-1564-00/02 AND KPN 050-1565-00/02).

**FIGURE 6-26C KT 76A Chassis Assy (S/N <110,000)**
**(Dwg. No. 300-02019-0000 R-11)**

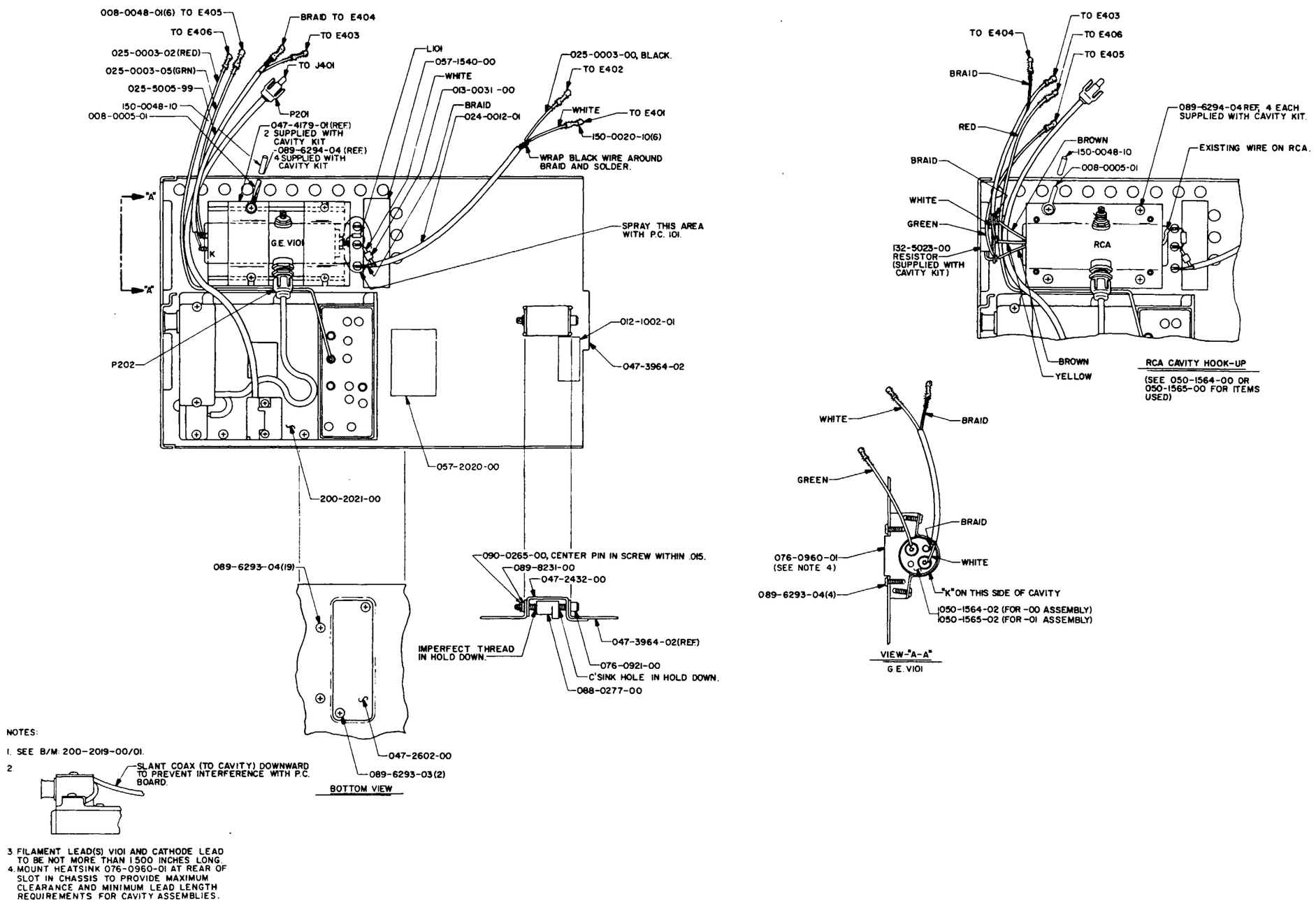


**FIGURE 6-26D KT 76A Chassis Assy (S/N <110,000)**
**(Dwg. No. 300-02019-0000 R-10)**

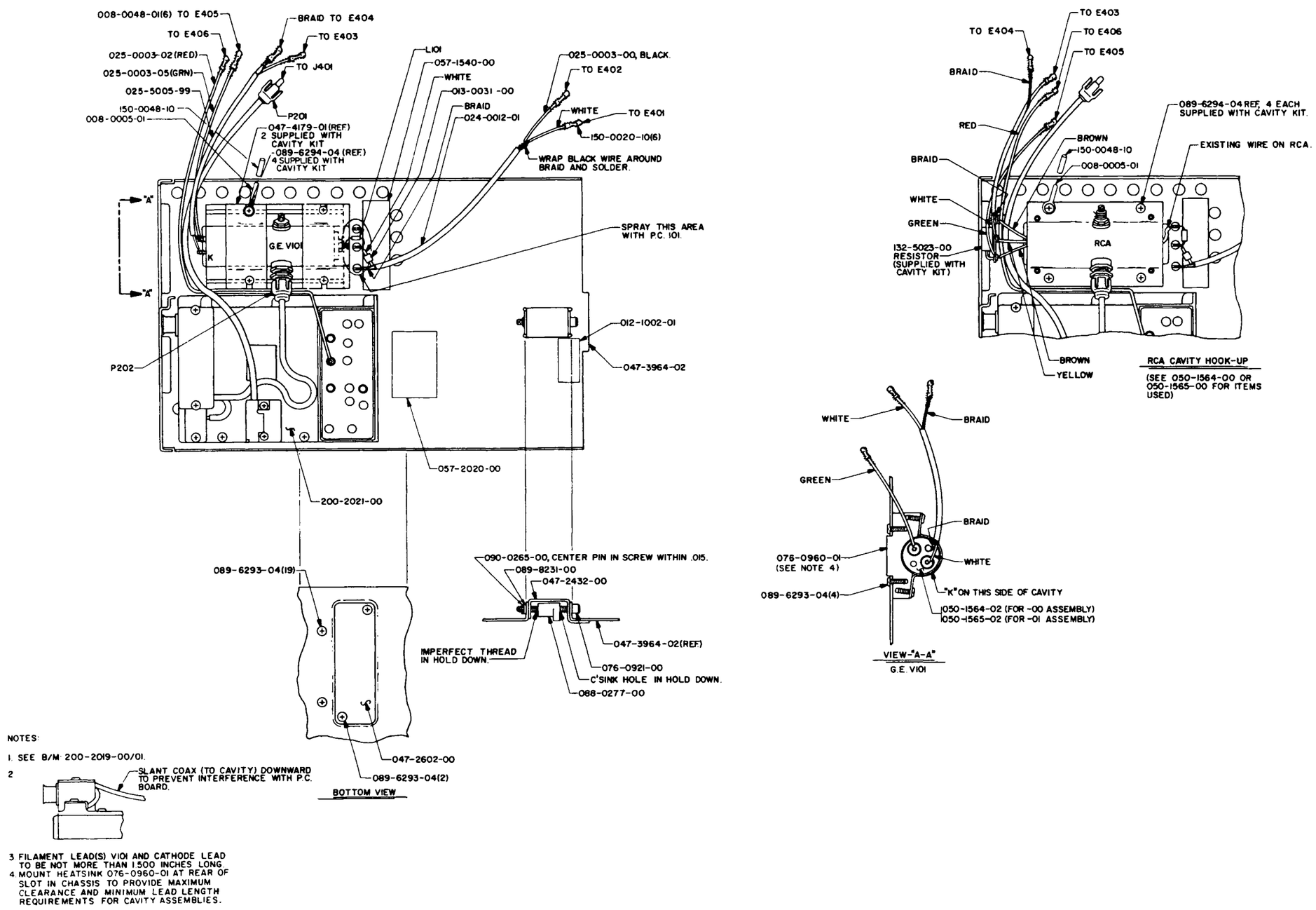


NOTES:

1. SEE B/M 200-2019-00/01.
2. SLANT COAX (TO CAVITY) DOWNWARD TO PREVENT INTERFERENCE WITH P.C. BOARD.
3. FILAMENT LEAD(S) V101 AND CATHODE LEAD TO BE NOT MORE THAN 1.500 INCHES LONG.
4. MOUNT HEATSINK 076-0960-01 AT REAR OF SLOT IN CHASSIS TO PROVIDE MAXIMUM CLEARANCE AND MINIMUM LEAD LENGTH REQUIREMENTS FOR CAVITY ASSEMBLIES.

**FIGURE 6-26E KT 76A Chassis Assy (S/N <110,000)**
**(Dwg. No. 300-02019-0000 R-9)**

PRESELECTOR

## 6.9 200-02021-0000 Rev. 9 PRESELECTOR

| SYMBOL | PART NUMBER | DESCRIPTION | UM | QUANTITY |
|---|---|---|---|---|
| | | | [] | -0000 |
| | 024-00012-0001 | CA-RG188A/U (MOD) | [IN] | 19.2 |
| | 024-05007-0000 | WIRE BUSS LP | [IN] | 2.4 |
| | 026-00003-0000 | WIRE COP TIN 22G | [IN] | 1.2 |
| | 026-00013-0000 | CA COAX RG-178BU | [IN] | 2.4 |
| | 030-00059-0000 | CONN COAX PNL MTD | [EA] | 1 |
| | 047-01678-0000 | COVER CONNECTOR | [EA] | 1 |
| | 047-01693-0000 | COVER LP FILTER | [EA] | 1 |
| | 047-02444-0001 | COVER MIXER W/H | [EA] | 1 |
| | 047-04178-0001 | PLATE DIODE W/F | [EA] | 1 |
| | 057-01250-0000 | WARNING TAG | [EA] | 1 |
| | 073-00169-0003 | HSG P/SLCTR W/HDW | [EA] | 1 |
| | 088-00716-0000 | DIODE HOLDER | [EA] | 1 |
| | 089-06190-0016 | SCR SET 10-32X1/2 | [EA] | 5 |
| | 089-06293-0003 | SCR PHP 3-48X3/16 | [EA] | 2 |
| | 089-06293-0004 | SCR PHP 3-48X1/4 | [EA] | 3 |
| | 089-06293-0008 | SCR PHP 3-48X1/2 | [EA] | 3 |
| | 090-00104-0001 | SOLDER RING .187 | [EA] | 1 |
| | 090-00104-0003 | SOLDER RING .050 | [EA] | 6 |
| | 091-00076-0000 | DIELECTRIC BLOCK | [EA] | 2 |
| | 150-00005-0010 | TUBING TFLN 20AWG | [IN] | 2.4 |
| | 200-02022-0000 | LOCAL OSC ASSY | [EA] | 1 |
| C 210 | 106-00008-0001 | CAP FT 33PF 500V | [EA] | 1 |
| C 211 | 106-00001-0017 | CAP FC .51PF10%500 | [EA] | 1 |
| C 212 | 106-00001-0002 | CAP FC 1.5PF10%500 | [EA] | 1 |
| C 213 | 106-00001-0006 | CAP FC 2PF 10%500V | [EA] | 1 |
| C 214 | 106-00001-0001 | CAP FC 1PF 10%500V | [EA] | 1 |
| C 215 | 106-00001-0017 | CAP FC .51PF10%500 | [EA] | 1 |
| C 216 | 106-00001-0002 | CAP FC 1.5PF10%500 | [EA] | 1 |
| CR 202 | 007-06092-0000 | DIO HC 5082-2835 | [EA] | 1 |
| FL 201 | 017-00023-0000 | FLTR BANDPASS | [EA] | 1 |
| L 205 | 047-02443-0001 | TUBE TNG | [EA] | 1 |
| P 201 | 030-00091-0000 | PLUG PHONO | [EA] | 1 |
| P 202 | 030-00091-0003 | PLUG PHONO | [EA] | 1 |
| REF 1 | 300-02021-0000 | PRESELECTOR | [RF] | X |

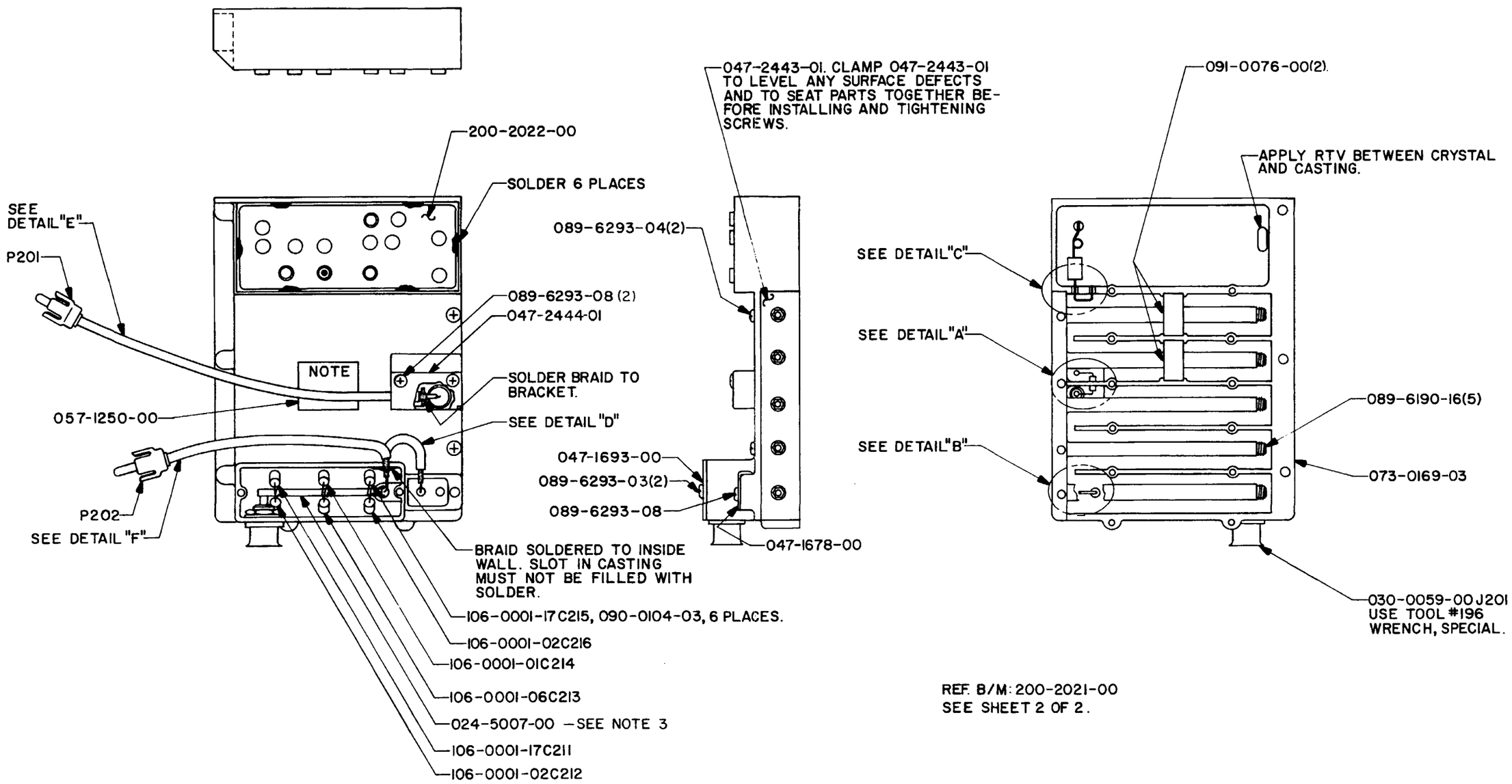


**FIGURE 6-27 KT 76A Preselector Assy (S/N < 110,000)**
**(Dwg. No. 300-02021-0000 R-8)**
**(Sheet 1 of 2)**

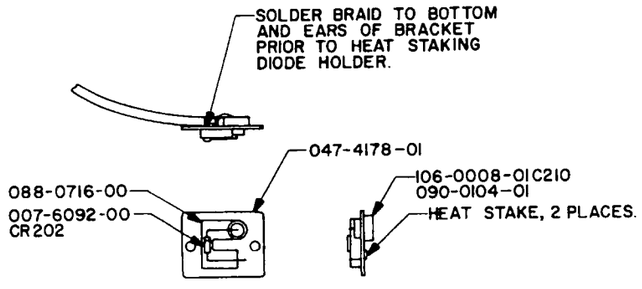


DETAIL "A"
PREFORM DIODE LEADS IN DIODE HOLDER

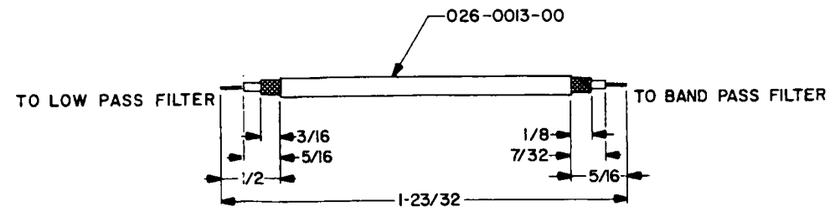


DETAIL "D"

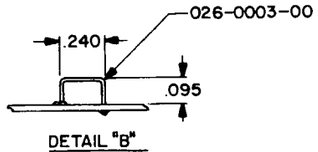


DETAIL "B"
USE TOOL 209 FORM, JIG

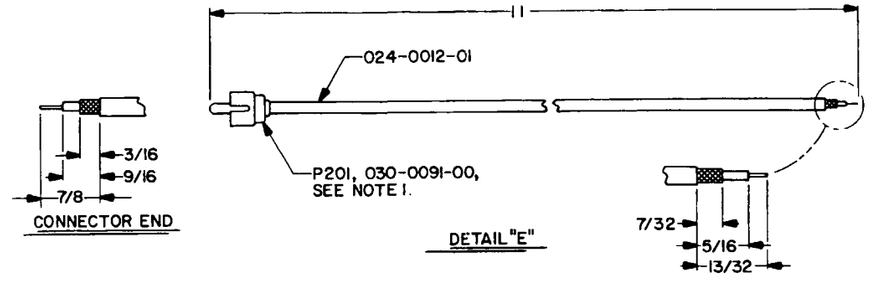


CONNECTOR END

DETAIL "E"

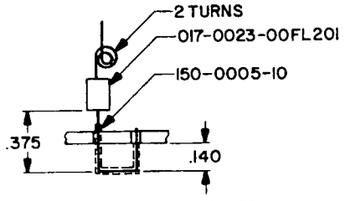


ALL CORNERS ARE RIGHT ANGLE BENDS.
DETAIL "C"

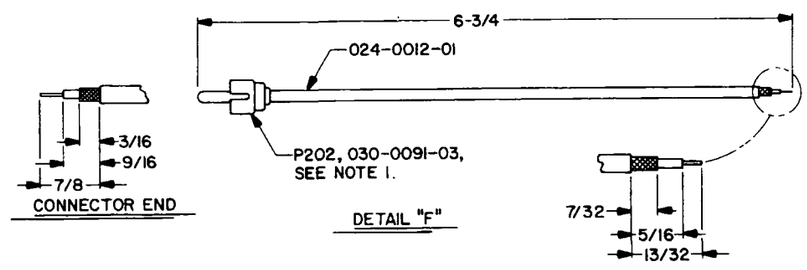


CONNECTOR END

DETAIL "F"

NOTES:

1. DETAIL ASSEMBLY INSTRUCTIONS:
   A. STRIP THE CONNECTOR END OF THE CABLE AS SHOWN.
   B. INSERT THE CABLE INTO THE CONNECTOR UNTIL THE SHIELD JUST ENTERS THE CONNECTOR.
   C. SOLDER THE CENTER CONDUCTOR AND MAKE SURE SOLDER FLOWS DOWN INTO CENTER PIN, BUT DOES NOT SHORT OUTER SHELL.
   D. CUT OFF EXCESS CENTER CONDUCTOR.
   E. BEAD SOLDER THE CABLE SHIELD TO THE CONNECTOR, TRY TO PREVENT ANY EXCESS WICKING OF SOLDER UP THE CABLE SHIELD.
2. ALL DIMENSIONS ARE IN INCHES.
3. ASSURE THAT 024-5007-00 IS STRAIGHT AND THAT CAPACITORS ARE SPACED ALONG WIRE SO AS TO ALIGN WITH HOLES IN CASTING.

**FIGURE 6-27 KT 76A Preselector Assy (S/N < 110,000)**
**(Dwg. No. 300-02021-0000 R-8)**
**(Sheet 2 of 2)**

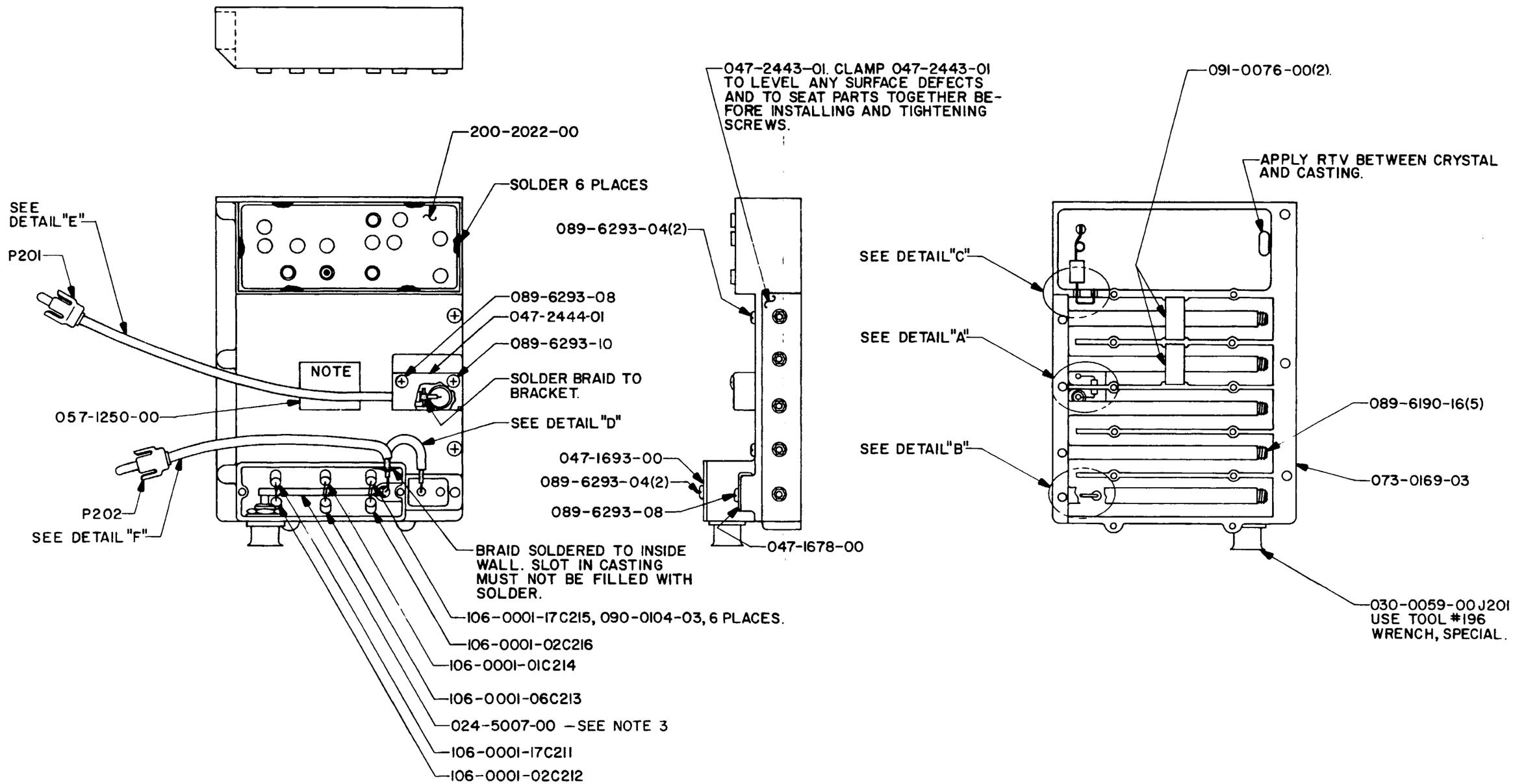


**FIGURE 6-27A KT 76A Preselector Assy (S/N < 110,000)**
**(Dwg. No. 300-02021-0000 R-6)**
**(Sheet 1 of 2)**

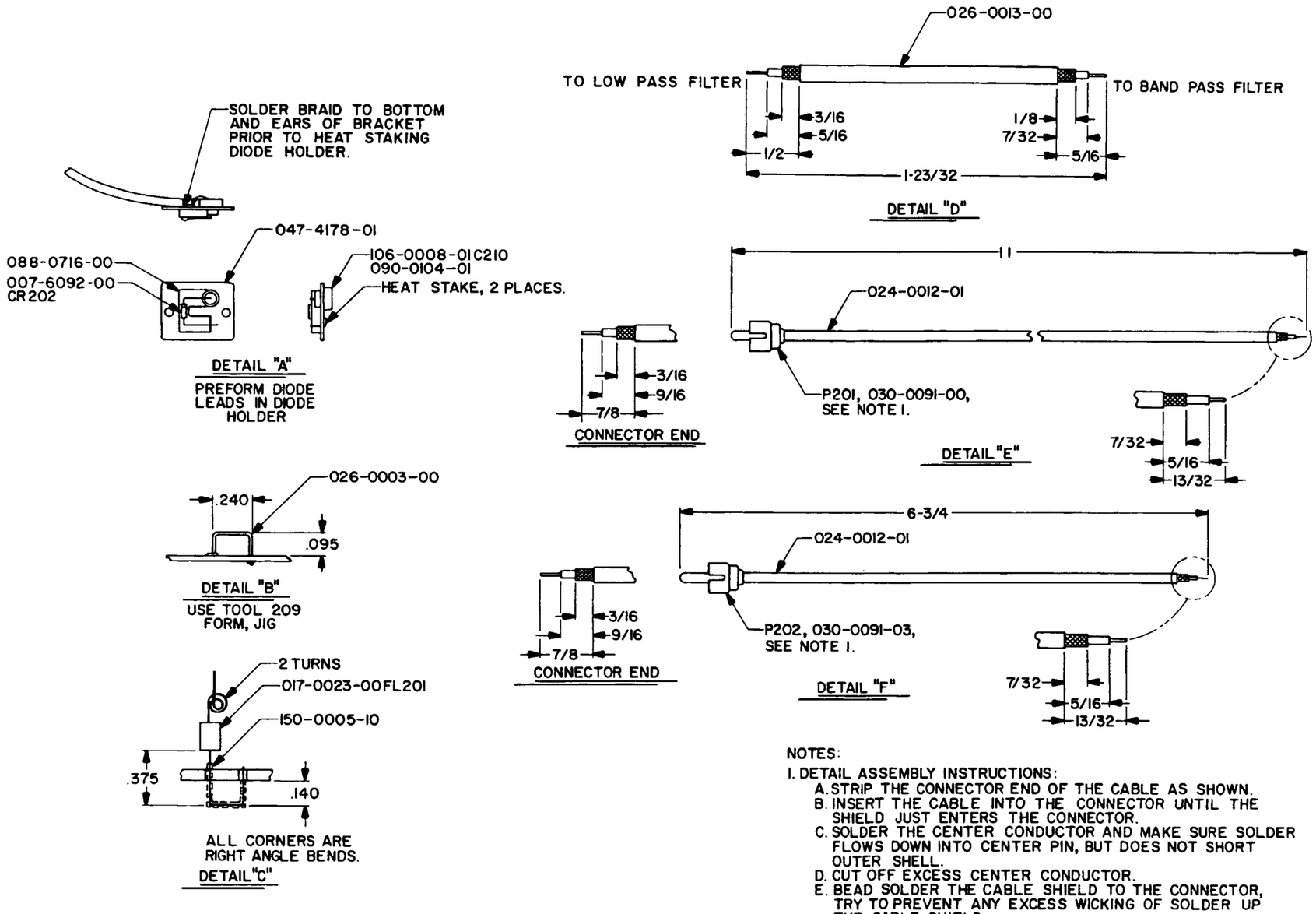


NOTES:

1. DETAIL ASSEMBLY INSTRUCTIONS:
   A. STRIP THE CONNECTOR END OF THE CABLE AS SHOWN.
   B. INSERT THE CABLE INTO THE CONNECTOR UNTIL THE SHIELD JUST ENTERS THE CONNECTOR.
   C. SOLDER THE CENTER CONDUCTOR AND MAKE SURE SOLDER FLOWS DOWN INTO CENTER PIN, BUT DOES NOT SHORT OUTER SHELL.
   D. CUT OFF EXCESS CENTER CONDUCTOR.
   E. BEAD SOLDER THE CABLE SHIELD TO THE CONNECTOR, TRY TO PREVENT ANY EXCESS WICKING OF SOLDER UP THE CABLE SHIELD.
2. ALL DIMENSIONS ARE IN INCHES.
3. ASSURE THAT 024-5007-00 IS STRAIGHT AND THAT CAPACITORS ARE SPACED ALONG WIRE SO AS TO ALIGN WITH HOLES IN CASTING.

**FIGURE 6-27A KT 76A Preselector Assy (S/N < 110,000)**
**(Dwg. No. 300-02021-0000 R-6)**
**(Sheet 2 of 2)**

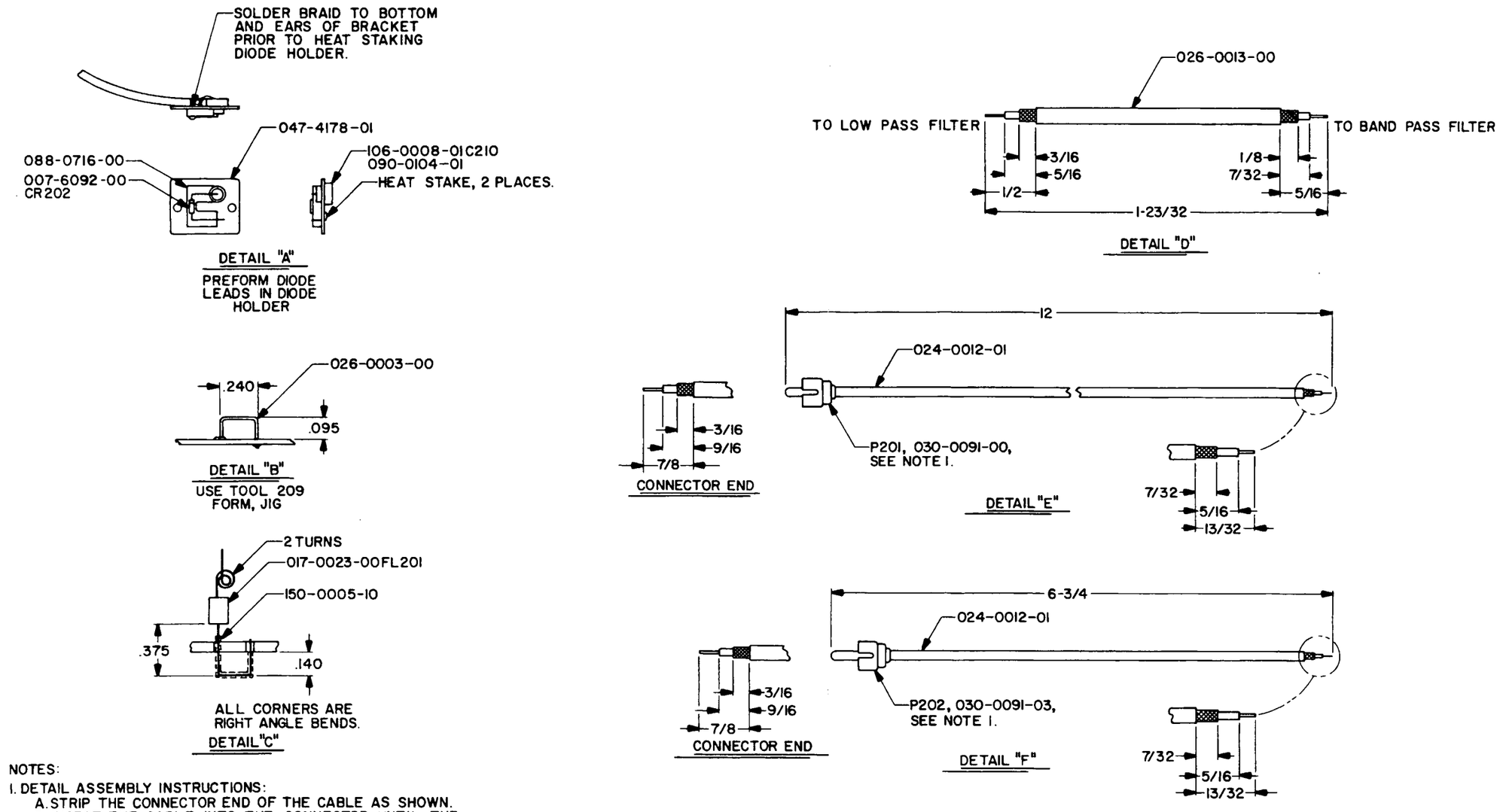


NOTES:

1. DETAIL ASSEMBLY INSTRUCTIONS:
   A. STRIP THE CONNECTOR END OF THE CABLE AS SHOWN.
   B. INSERT THE CABLE INTO THE CONNECTOR UNTIL THE SHIELD JUST ENTERS THE CONNECTOR.
   C. SOLDER THE CENTER CONDUCTOR AND MAKE SURE SOLDER FLOWS DOWN INTO CENTER PIN, BUT DOES NOT SHORT OUTER SHELL.
   D. CUT OFF EXCESS CENTER CONDUCTOR.
   E. BEAD SOLDER THE CABLE SHIELD TO THE CONNECTOR, TRY TO PREVENT ANY EXCESS WICKING OF SOLDER UP THE CABLE SHIELD.
2. ALL DIMENSIONS ARE IN INCHES.

**FIGURE 6-27B KT 76A Preselector Assy (S/N < 110,000)**
**(Dwg. No. 300-02021-0000 R-2)**
**(Sheet 1 of 2)**

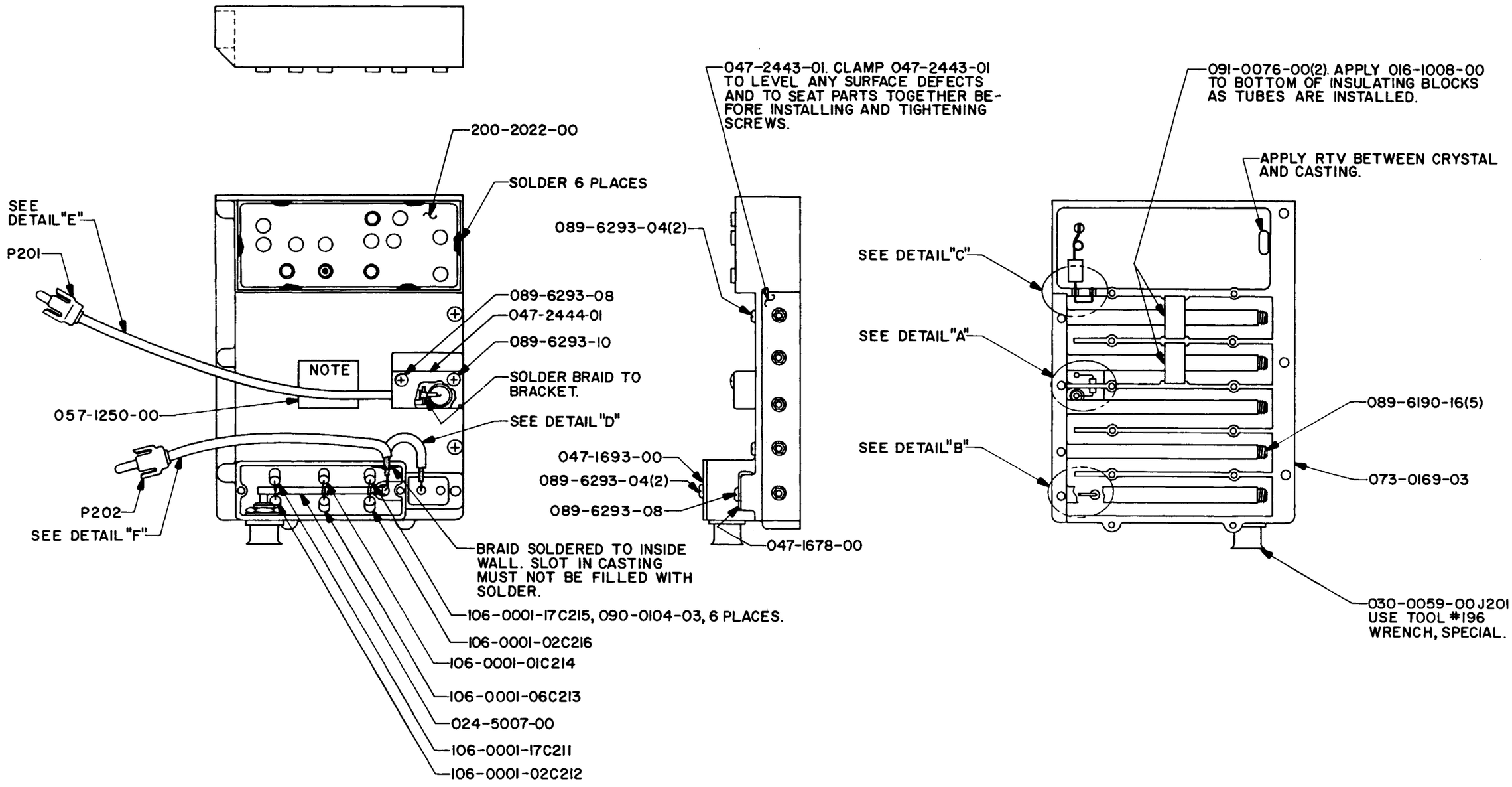


**FIGURE 6-27B KT 76A Preselector Assy (S/N < 110,000)**
**(Dwg. No. 300-02021-0000 R-2)**
**(Sheet 2 of 2)**

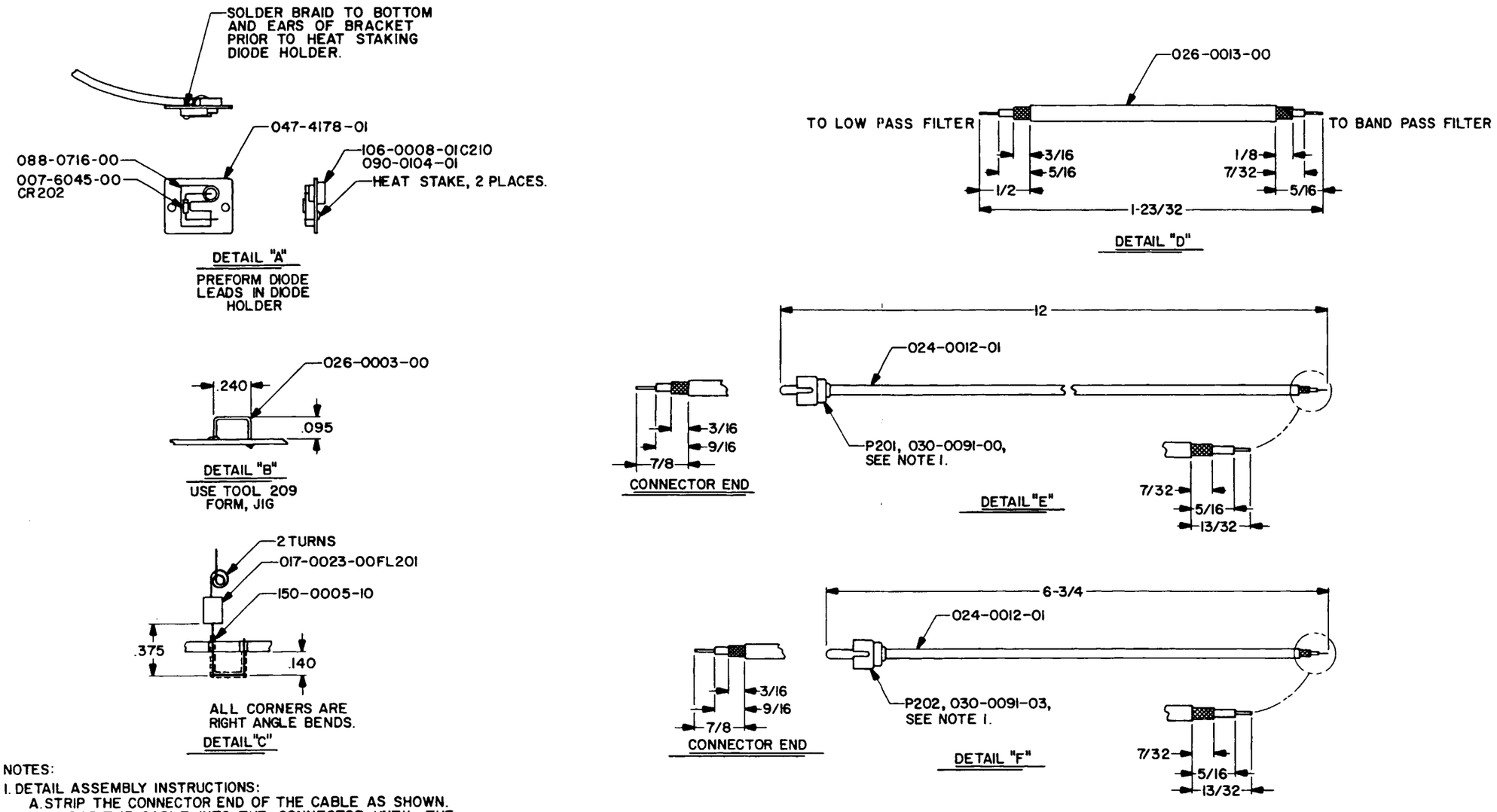


NOTES:

1. DETAIL ASSEMBLY INSTRUCTIONS:
   A. STRIP THE CONNECTOR END OF THE CABLE AS SHOWN.
   B. INSERT THE CABLE INTO THE CONNECTOR UNTIL THE SHIELD JUST ENTERS THE CONNECTOR.
   C. SOLDER THE CENTER CONDUCTOR AND MAKE SURE SOLDER FLOWS DOWN INTO CENTER PIN, BUT DOES NOT SHORT OUTER SHELL.
   D. CUT OFF EXCESS CENTER CONDUCTOR.
   E. BEAD SOLDER THE CABLE SHIELD TO THE CONNECTOR, TRY TO PREVENT ANY EXCESS WICKING OF SOLDER UP THE CABLE SHIELD.
2. ALL DIMENSIONS ARE IN INCHES.

**FIGURE 6-27C KT 76A Preselector Assy (S/N < 110,000)**
**(Dwg. No. 300-02021-0000 R-1)**
**(Sheet 1 of 2)**

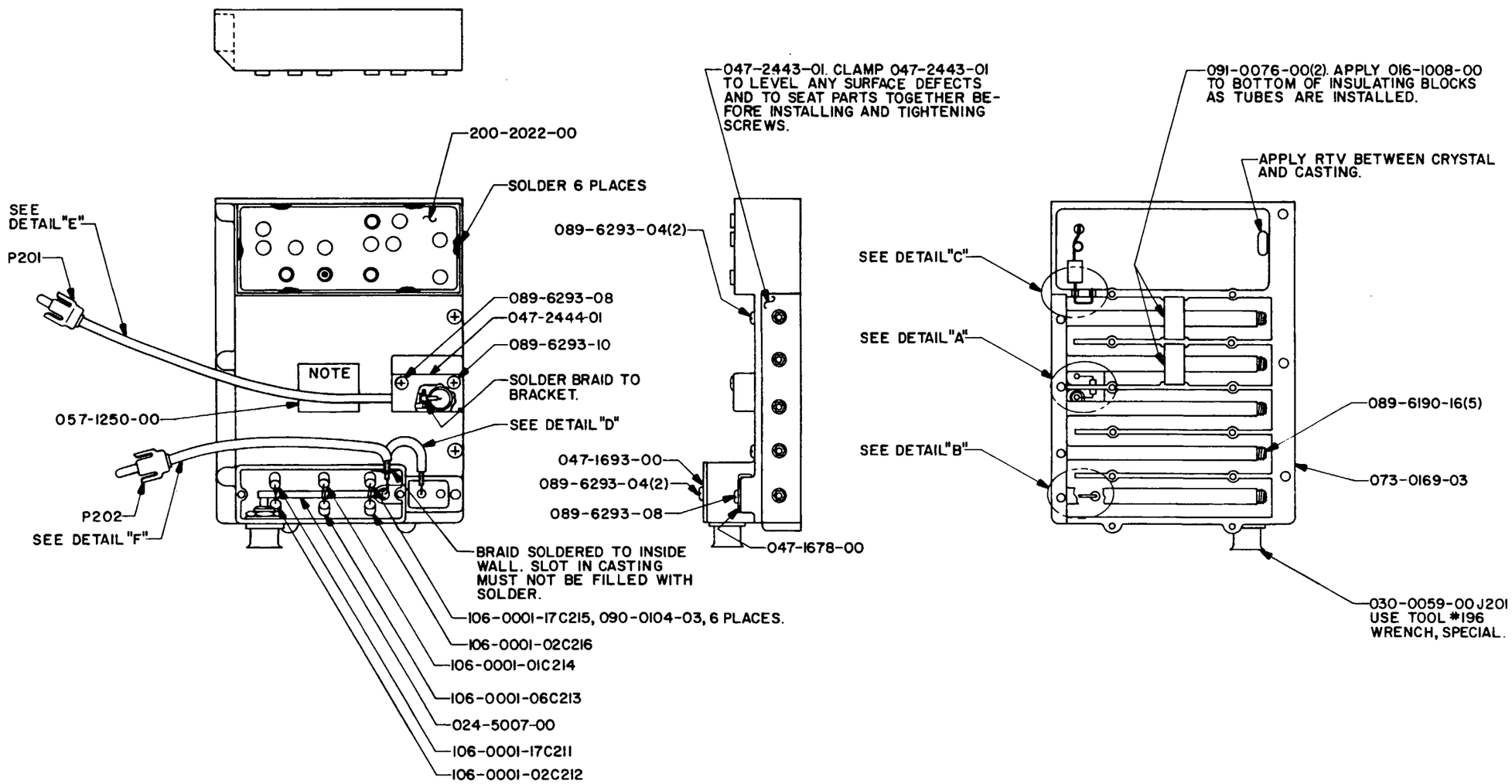


**FIGURE 6-27C KT 76A Preselector Assy (S/N < 110,000)**
**(Dwg. No. 300-02021-0000 R-1)**
**(Sheet 2 of 2)**

LOCAL OSCILLATOR ASSY

## 6.10 200-02022-0000 Rev. 10 LOCAL OSCILLATOR ASSY

| SYMBOL | PART NUMBER | DESCRIPTION | UM | QUANTITY |
|---|---|---|---|---|
| | | | | -0000 |
| | 016-01004-0000 | COMPOUND THRML JNT | [AR] | 0 |
| | 047-04022-0002 | PLATE OSC W/H | [EA] | 1 |
| | 090-00104-0001 | SOLDER RING .187 | [EA] | 4 |
| C 201 | 106-00017-0000 | CAP FT 470PF 500V | [EA] | 1 |
| C 202 | 106-00017-0000 | CAP FT 470PF 500V | [EA] | 1 |
| C 203 | 106-00017-0000 | CAP FT 470PF 500V | [EA] | 1 |
| C 204 | 106-00021-0008 | CAP FT 470PF 500V | [EA] | 1 |
| C 205 | 113-03100-0000 | CAP DC 10PF 500V | [EA] | 1 |
| C 206 | 113-03150-0000 | CAP DC 15PF 500V | [EA] | 1 |
| C 207 | 113-03047-0000 | CAP DC 4.7PF 500V | [EA] | 1 |
| C 208 | 118-00007-0000 | CAP DC 33PF 500V | [EA] | 1 |
| C 209 | 113-03068-0000 | CAP DC 6.8PF 500V | [EA] | 1 |
| C 217 | 113-05201-0000 | CAP DC 200PF 500V | [EA] | 1 |
| CR 201 | 007-06046-0005 | DIO S 1N916A | [EA] | 1 |
| L 201 | 019-02253-0000 | RF COIL | [EA] | 1 |
| L 202 | 019-02253-0001 | RF COIL | [EA] | 1 |
| L 203 | 019-02254-0000 | RF COIL | [EA] | 1 |
| L 204 | 019-02253-0002 | RF COIL | [EA] | 1 |
| L 206 | 019-02054-0011 | CH RF .39UH 5% | [EA] | 1 |
| L 207 | 019-02054-0006 | CH RF .15UH 5% | [EA] | 1 |
| Q 201 | 007-00237-0000 | XSTR S NPN SPS6797 | [EA] | 1 |
| Q 202 | 007-00237-0000 | XSTR S NPN SPS6797 | [EA] | 1 |
| R 201 | 131-00102-0023 | RES CF 1K QW 5% | [EA] | 1 |
| R 202 | 131-00182-0023 | RES CF 1.8K QW 5% | [EA] | 1 |
| R 203 | 131-00681-0023 | RES CF 680 QW 5% | [EA] | 1 |
| R 204 | 131-00911-0023 | RES CF 910 QW 5% | [EA] | 1 |
| R 205 | 131-00102-0023 | RES CF 1K QW 5% | [EA] | 1 |
| R 206 | 131-00510-0023 | RES CF 51 QW 5% | [EA] | 1 |
| R 207 | 131-00301-0023 | RES CF 300 QW 5% | [EA] | 1 |
| R 208 | 131-00392-0023 | RES CF 3.9K QW 5% | [EA] | 1 |
| R 209 | 131-00222-0023 | RES CF 2.2K QW 5% | [EA] | 1 |
| Y 201 | 044-00021-0000 | XTAL 138.571MHZ | [EA] | 1 |
| REF 1 | 300-02022-0000 | LOCAL OSC. | [RF] | X |

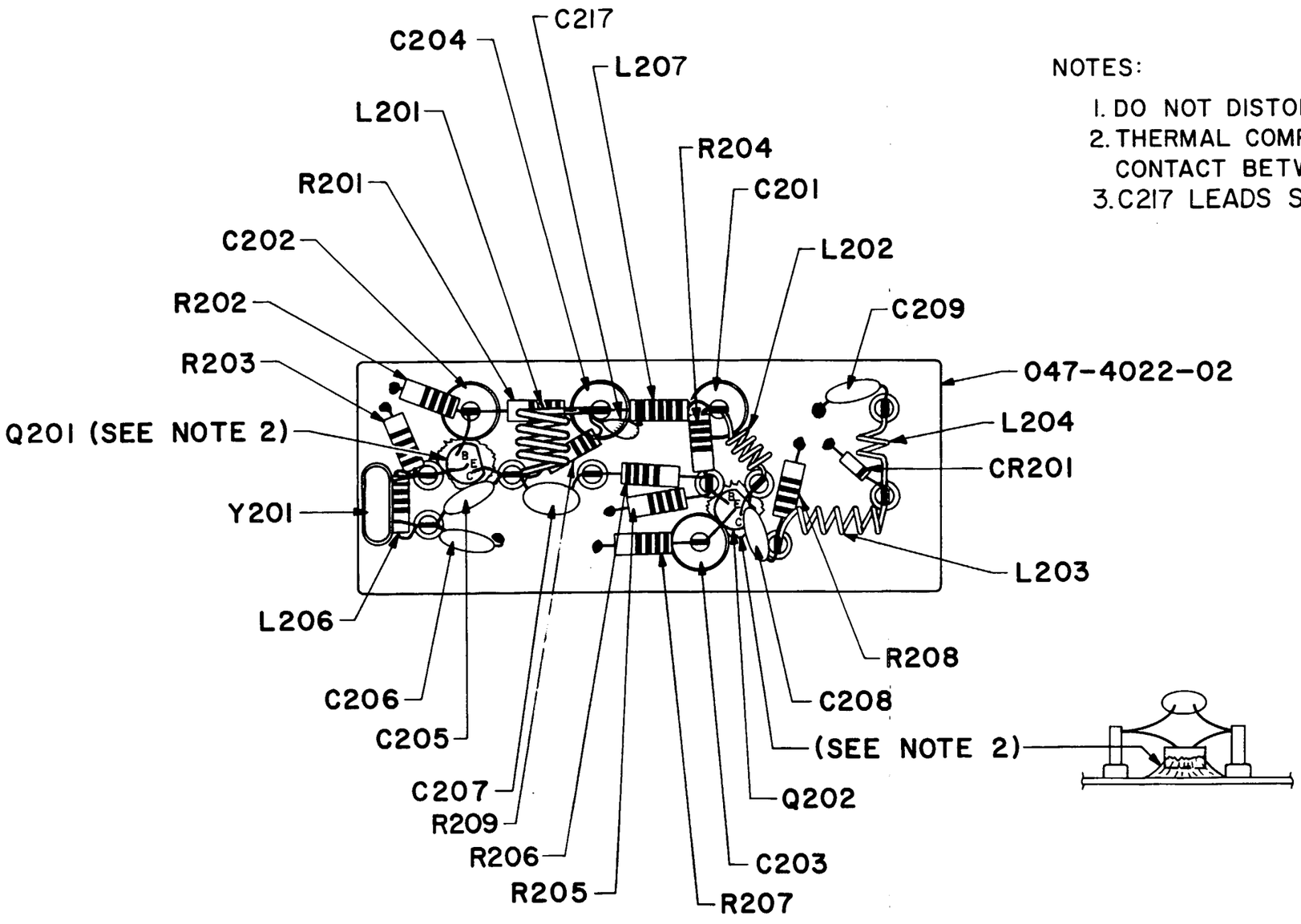


NOTES:

1. DO NOT DISTORT COILS DURING ASS'Y.
2. THERMAL COMPOUND 016-1004-00 TO MAKE GOOD CONTACT BETWEEN Q201, Q202 AND METAL PLATE.
3. C217 LEADS SHALL BE TO A ABSOLUTE MINIMUM

**FIGURE 6-28 KT 76A Local Oscillator (S/N < 110,000)**
**(Dwg. No. 300-02022-0000 R-6)**

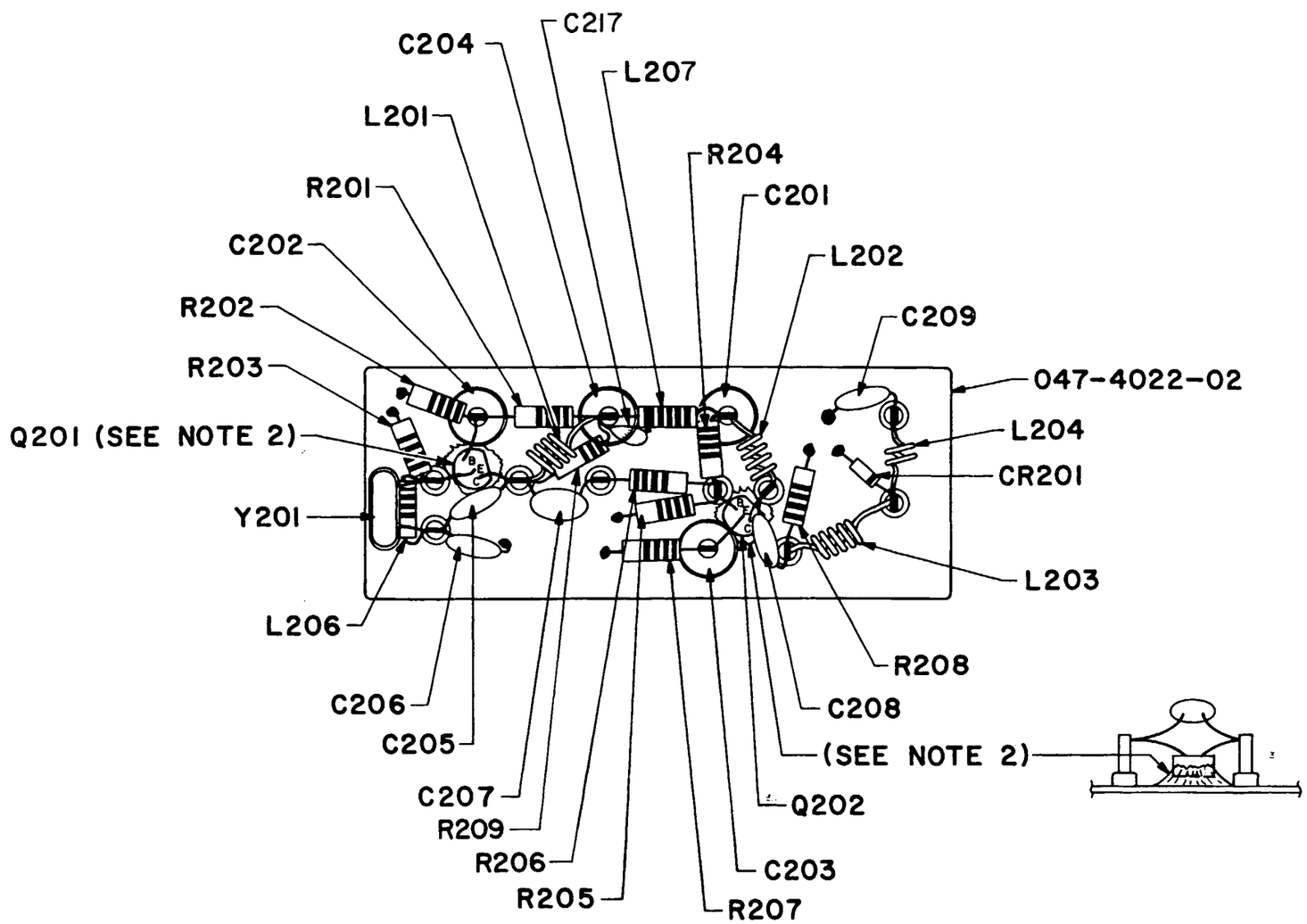


NOTES:

1. DO NOT DISTORT COILS DURING ASS'Y.
2. THERMAL COMPOUND 016-1004-00 TO MAKE GOOD CONTACT BETWEEN Q201, Q202 AND METAL PLATE.
3. C217 LEADS SHALL BE TO A ABSOLUTE MINIMUM

**FIGURE 6-28A KT 76A Local Oscillator (S/N < 110,000)**
**(Dwg. No. 300-02022-0000 R-5)**

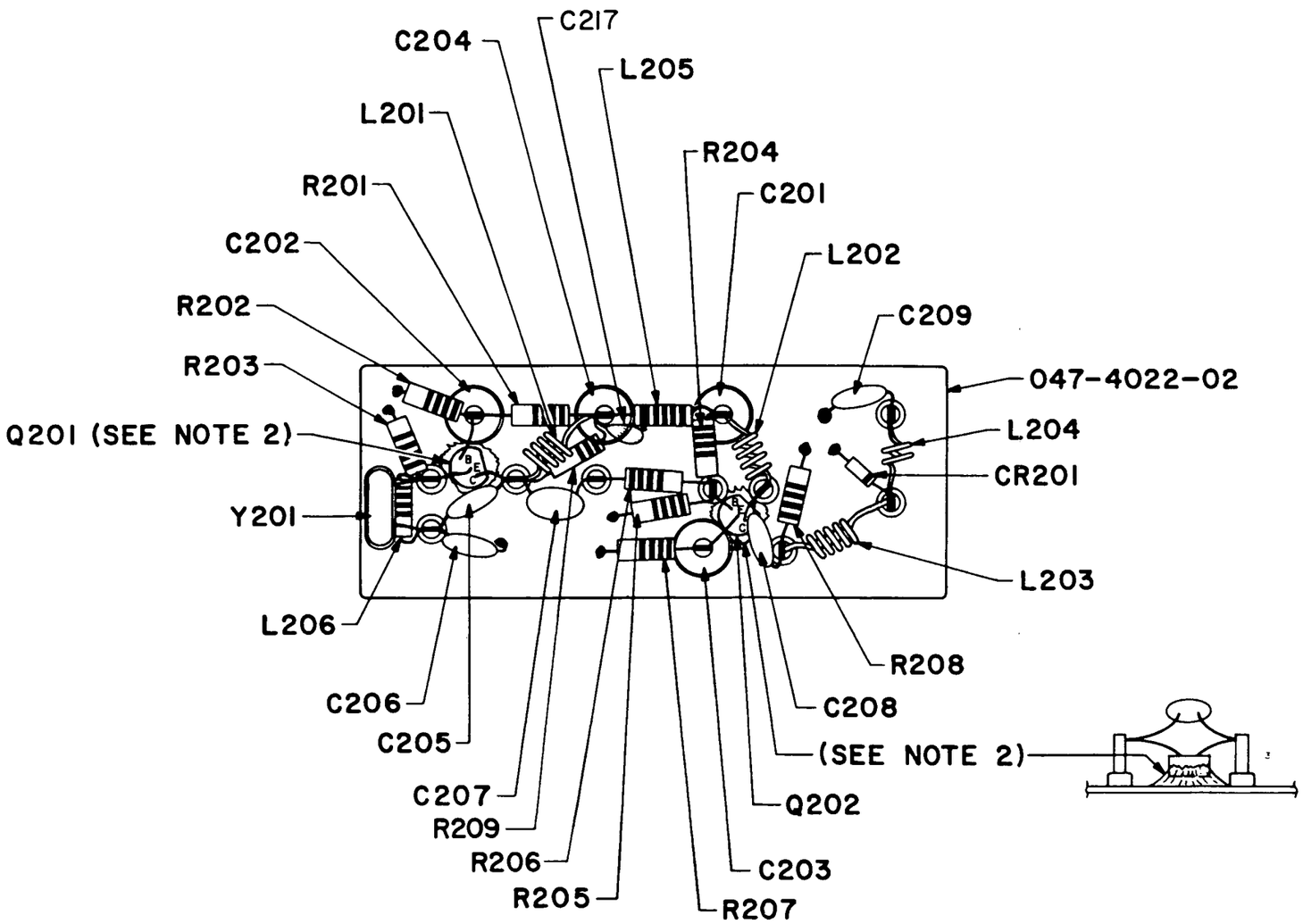


NOTES:

1. DO NOT DISTORT COILS DURING ASS'Y.
2. THERMAL COMPOUND 016-1004-00 TO MAKE GOOD CONTACT BETWEEN Q201, Q202 AND METAL PLATE.
3. C217 LEADS SHALL BE TO A ABSOLUTE MINIMUM

**FIGURE 6-28B KT 76A Local Oscillator (S/N < 110,000)**
**(Dwg. No. 300-02022-0000 R-0)**

FILTER/HEATSINK ASSY

## 6.11 200-05669-0000 Rev. 3 FILTER/HEATSINK ASSY

| SYMBOL | PART NUMBER | DESCRIPTION | UM | QUANTITY |
|---|---|---|---|---|
| | | | | -0000 |
| ITM 1 | 026-00027-0000 | WIRE CU18AWG TIN | [IN] | 3.04 |
| ITM 10 | 012-01653-0002 | THERMAL PAD | [EA] | 1 |
| ITM 11 | 026-00013-0000 | CA COAX RG-178BU | [IN] | 2.7 |
| ITM 12 | 155-02857-0001 | CABLE HARNESS_ CAVITY OSC | [EA] | 1 |
| ITM 13 | 089-06691-0000 | SET SCREW_ HEX SOCKET | [EA] | 1 |
| ITM 2 | 047-12015-0001 | CAPACITIVE DISK .083 | [EA] | 1 |
| ITM 3 | 047-12015-0007 | CAPACITIVE DISK | [EA] | 1 |
| ITM 4 | 047-12015-0001 | CAPACITIVE DISK .083 | [EA] | 1 |
| ITM 5 | 030-00059-0000 | CONN COAX PNL MTD | [EA] | 1 |
| ITM 6 | 150-00026-0010 | TUBING SHRINK 6&4G | [IN] | 2.85 |
| ITM 7 | 047-12016-0002 | FILTER DIPLEXER END | [EA] | 1 |
| ITM 9 | 075-00173-0003 | EXTRUSION_ PLATED | [EA] | 1 |
| REF 1 | 300-05669-0000 | FILTER/HEATSINK ASSY. | [RF] | X |

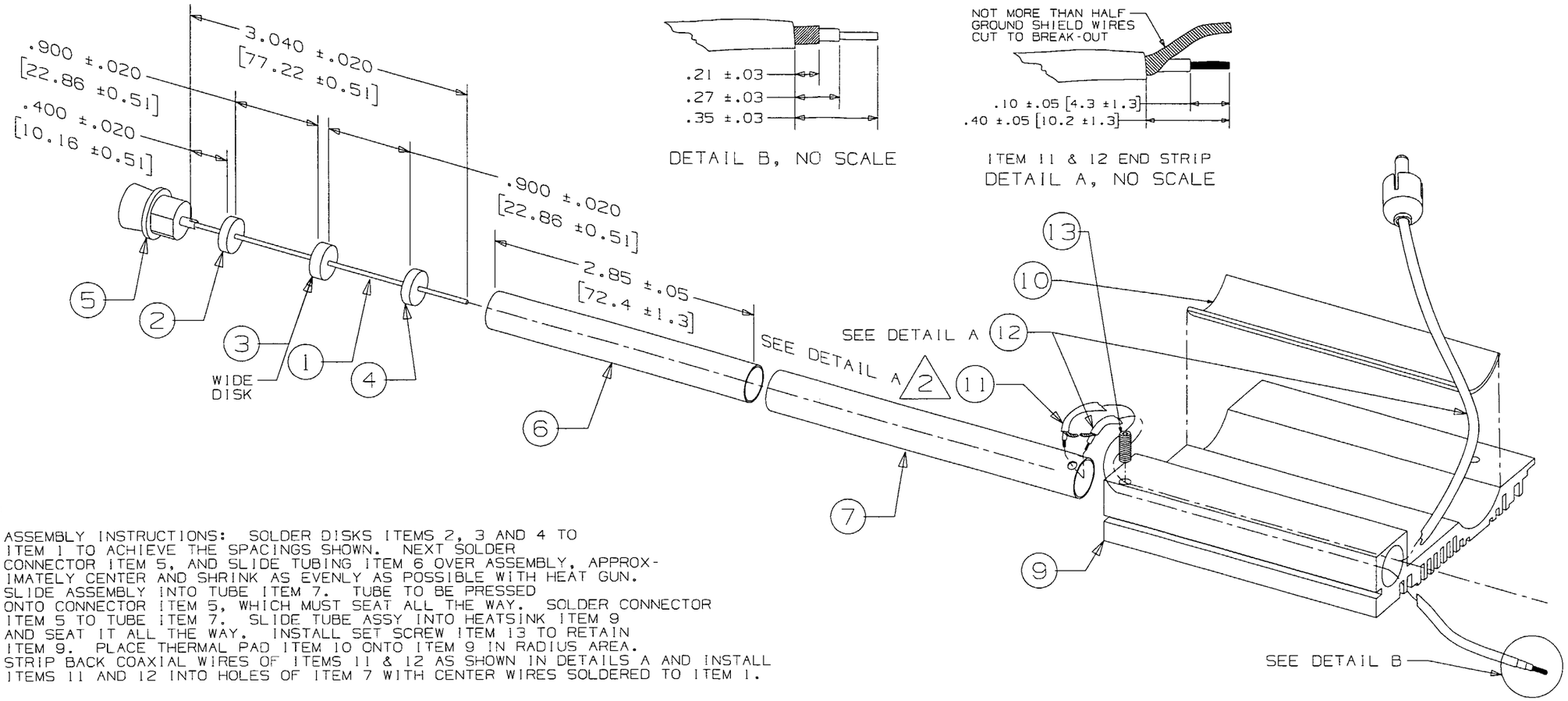


NOTES:

1. ASSEMBLY INSTRUCTIONS: SOLDER DISKS ITEMS 2, 3 AND 4 TO ITEM 1 TO ACHIEVE THE SPACINGS SHOWN. NEXT SOLDER CONNECTOR ITEM 5, AND SLIDE TUBING ITEM 6 OVER ASSEMBLY, APPROXIMATELY CENTER AND SHRINK AS EVENLY AS POSSIBLE WITH HEAT GUN. SLIDE ASSEMBLY INTO TUBE ITEM 7. TUBE TO BE PRESSED ONTO CONNECTOR ITEM 5, WHICH MUST SEAT ALL THE WAY. SOLDER CONNECTOR ITEM 5 TO TUBE ITEM 7. SLIDE TUBE ASSY INTO HEATSINK ITEM 9 AND SEAT IT ALL THE WAY. INSTALL SET SCREW ITEM 13 TO RETAIN ITEM 9. PLACE THERMAL PAD ITEM 10 ONTO ITEM 9 IN RADIUS AREA. STRIP BACK COAXIAL WIRES OF ITEMS 11 & 12 AS SHOWN IN DETAILS A AND INSTALL ITEMS 11 AND 12 INTO HOLES OF ITEM 7 WITH CENTER WIRES SOLDERED TO ITEM 1.

△2 COAX ITEM 11 INSTALLED LENGTH OF CENTER CONDUCTOR TO BE 2.70 ±0.040in. COAX MUST BE STRIPPED BACK AS SHOWN IN DETAILS A & B. INSTALL CABLE ASSY ITEM 11 AS SHOWN.

THIS DRAWING NOT COMPLETE WITHOUT PARTS LIST 200-05669-0000

ELECTRICAL SPECIFICATIONS:

S21 -- INSERTION LOSS 0.6 dB MAX FOR 1.03 GHz AND 1.09 GHz 30 dB MIN FOR 2.18 GHz.

S11 -- RETURN LOSS = ≥ 10dB AT 1.03 GHz AND 1.09 GHz.

300056690000R4S1

**FIGURE 6-29 KT 76A Filter/Heatsink (S/N ≥ 110,000)**
**(Dwg. No. 300-05669-0000 R-4)**

RFI MOD FILTER

## 6.12 071-02010-0000 Rev. 0 RFI MOD FILTER

| SYMBOL | PART NUMBER | DESCRIPTION | UM | QUANTITY |
|---|---|---|---|---|
| | | | | -0000 |
| | 047-04908-0002 | CVRS T B | [EA] | 1 |
| | 047-04909-0002 | LFT RF SDS | [EA] | 1 |
| | 089-05901-0003 | SCR PHP 3-48X3/16 | [EA] | 4 |
| | 089-05903-0007 | SCR PHP 4-40X7/16 | [EA] | 4 |
| | 200-06203-0000 | RFI ASSY | [EA] | 1 |

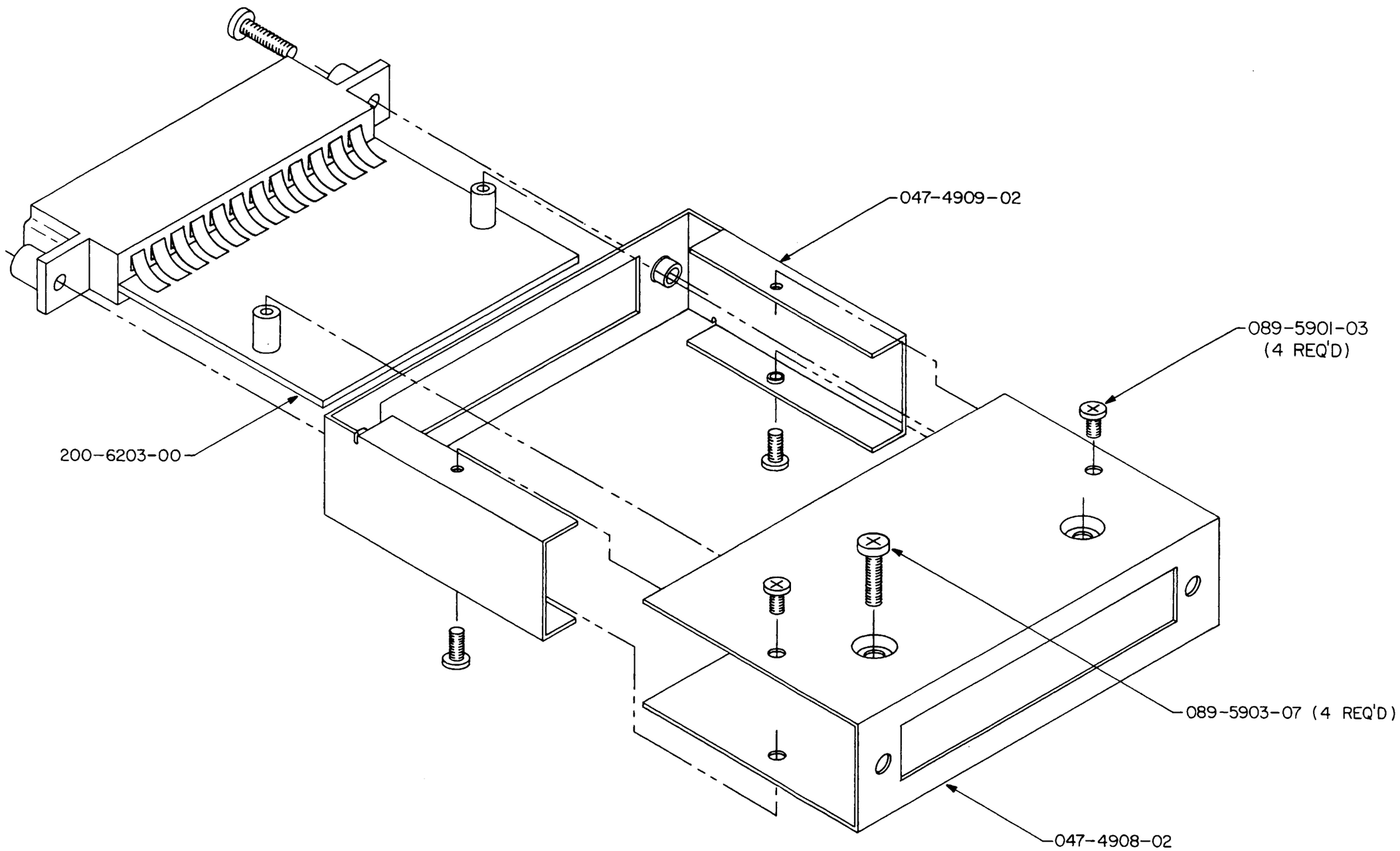


**FIGURE 6-30 KT 76A Final Assembly RFI Mod Filter**
**(Dwg. No. 300-02482-0000 R-0)**

RFI ASSY

## 6.13 200-06203-0000 Rev. 4 RFI ASSY

| SYMBOL | PART NUMBER | DESCRIPTION | UM | QUANTITY |
|---|---|---|---|---|
| | | | | -0000 |
| | 009-06203-0000 | PC BOARD | [EA] | 1 |
| | 026-00003-0000 | WIRE COP TIN 22G | [IN] | 2.4 |
| | 030-01096-0000 | KEY POLARIZER | [EA] | 1 |
| | 030-01103-0024 | TERM SLDR CH | [EA] | 1 |
| | 076-00012-0002 | SPACER 4-40 .250LG | [EA] | 2 |
| C 501 | 111-00001-0015 | CAP CR 330PF 50V | [EA] | 1 |
| C 502 | 113-07503-0000 | CAP DC .05UF 12V | [EA] | 1 |
| C 503 | 111-00001-0015 | CAP CR 330PF 50V | [EA] | 1 |
| C 504 | 111-00001-0015 | CAP CR 330PF 50V | [EA] | 1 |
| C 505 | 111-00001-0015 | CAP CR 330PF 50V | [EA] | 1 |
| C 506 | 111-00001-0015 | CAP CR 330PF 50V | [EA] | 1 |
| C 507 | 111-00001-0015 | CAP CR 330PF 50V | [EA] | 1 |
| C 508 | 111-00001-0015 | CAP CR 330PF 50V | [EA] | 1 |
| C 509 | 111-00001-0015 | CAP CR 330PF 50V | [EA] | 1 |
| C 510 | 111-00001-0015 | CAP CR 330PF 50V | [EA] | 1 |
| C 511 | 111-00001-0015 | CAP CR 330PF 50V | [EA] | 1 |
| C 512 | 111-00001-0015 | CAP CR 330PF 50V | [EA] | 1 |
| C 513 | 111-00001-0015 | CAP CR 330PF 50V | [EA] | 1 |
| C 514 | 111-00001-0015 | CAP CR 330PF 50V | [EA] | 1 |
| C 515 | 111-00001-0015 | CAP CR 330PF 50V | [EA] | 1 |
| C 516 | 111-00001-0015 | CAP CR 330PF 50V | [EA] | 1 |
| C 517 | 111-00001-0015 | CAP CR 330PF 50V | [EA] | 1 |
| C 518 | 111-00001-0015 | CAP CR 330PF 50V | [EA] | 1 |
| CR 501 | 007-06046-0005 | DIO S 1N916A | [EA] | 1 |
| CR 502 | 007-06046-0005 | DIO S 1N916A | [EA] | 1 |
| CR 503 | 007-06046-0005 | DIO S 1N916A | [EA] | 1 |
| L 501 | 013-00006-0003 | FERR BEAD | [EA] | 1 |
| L 502 | 013-00006-0003 | FERR BEAD | [EA] | 1 |
| L 503 | 013-00006-0003 | FERR BEAD | [EA] | 1 |
| L 504 | 013-00006-0003 | FERR BEAD | [EA] | 1 |
| L 505 | 013-00006-0003 | FERR BEAD | [EA] | 1 |
| P 501 | 030-01094-0002 | CONNECTOR 12/24 P | [EA] | 1 |
| R 502 | 131-00103-0033 | RES CF 10K HW 5% | [EA] | 1 |
| R 504 | 131-00471-0013 | RES CF 470 EW 5% | [EA] | 1 |
| R 505 | 131-00471-0013 | RES CF 470 EW 5% | [EA] | 1 |
| R 506 | 131-00471-0013 | RES CF 470 EW 5% | [EA] | 1 |
| R 507 | 131-00471-0013 | RES CF 470 EW 5% | [EA] | 1 |
| R 508 | 131-00471-0013 | RES CF 470 EW 5% | [EA] | 1 |

| SYMBOL | PART NUMBER | DESCRIPTION | UM | QUANTITY |
|---|---|---|---|---|
| | | | | -0000 |
| R 509 | 131-00471-0013 | RES CF 470 EW 5% | [EA] | 1 |
| R 510 | 131-00471-0013 | RES CF 470 EW 5% | [EA] | 1 |
| R 511 | 131-00471-0013 | RES CF 470 EW 5% | [EA] | 1 |
| R 512 | 131-00471-0013 | RES CF 470 EW 5% | [EA] | 1 |
| R 513 | 131-00471-0013 | RES CF 470 EW 5% | [EA] | 1 |
| R 514 | 131-00471-0013 | RES CF 470 EW 5% | [EA] | 1 |

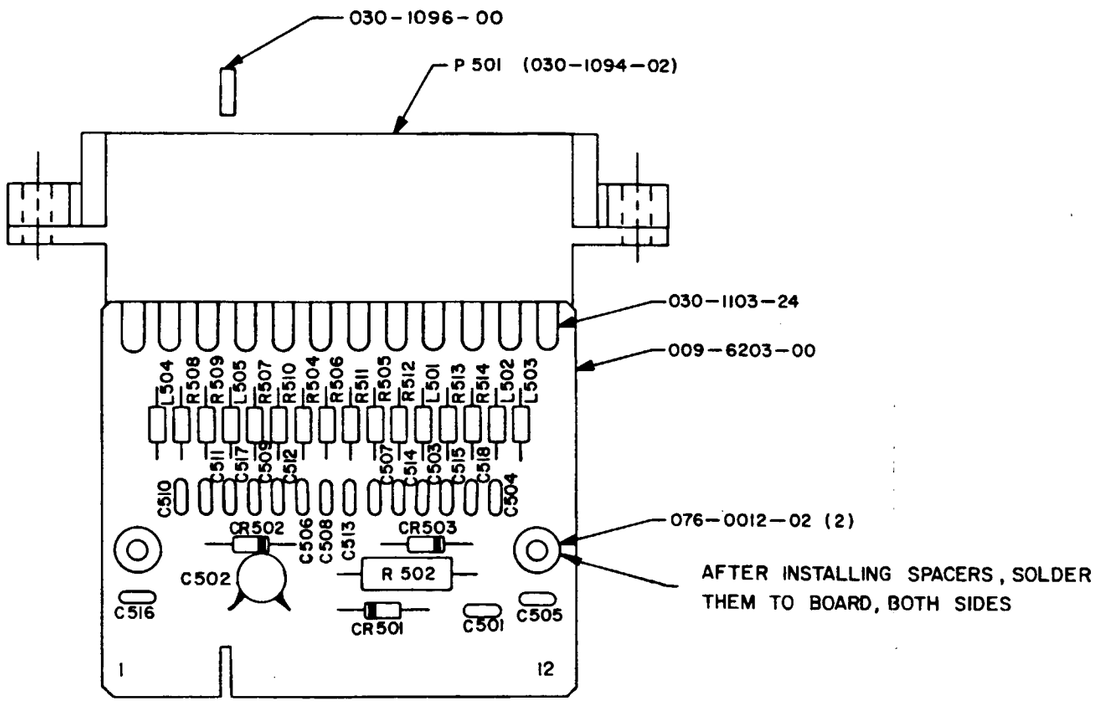


NOTES:

1. 22 GA. (026-0003-00) SOLID WIRE RUNS THRU FERRITE BEADS L501—L505.
2. SEE DETAIL "A" FOR C501 AND C503 THRU C518.
3. CENTER PINS A-N P501, ON PADS LOCATED FAR SIDE OF PC BOARD AND SOLDER.
   FORM PINS 1-12 P501, TO MAKE CONTACT WITH PADS COMPONENT SIDE OF PC BOARD AND SOLDER. SEE DETAIL B.
4. INSERT KEY POLARIZER (030-1096-00) BETWEEN PINS 3 AND 4 P501.
5. C502 DOWN FOR MAXIMUM CLEARANCE OF COVER POSITION.

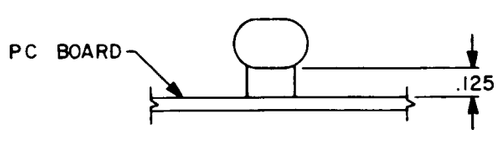


DETAIL "A"

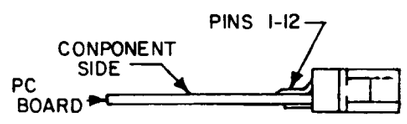


DETAIL "B"

**FIGURE 6-31 KT 76A RFI Filter Board Assy**
**(Dwg. No. 300-06203-0000 R-2)**

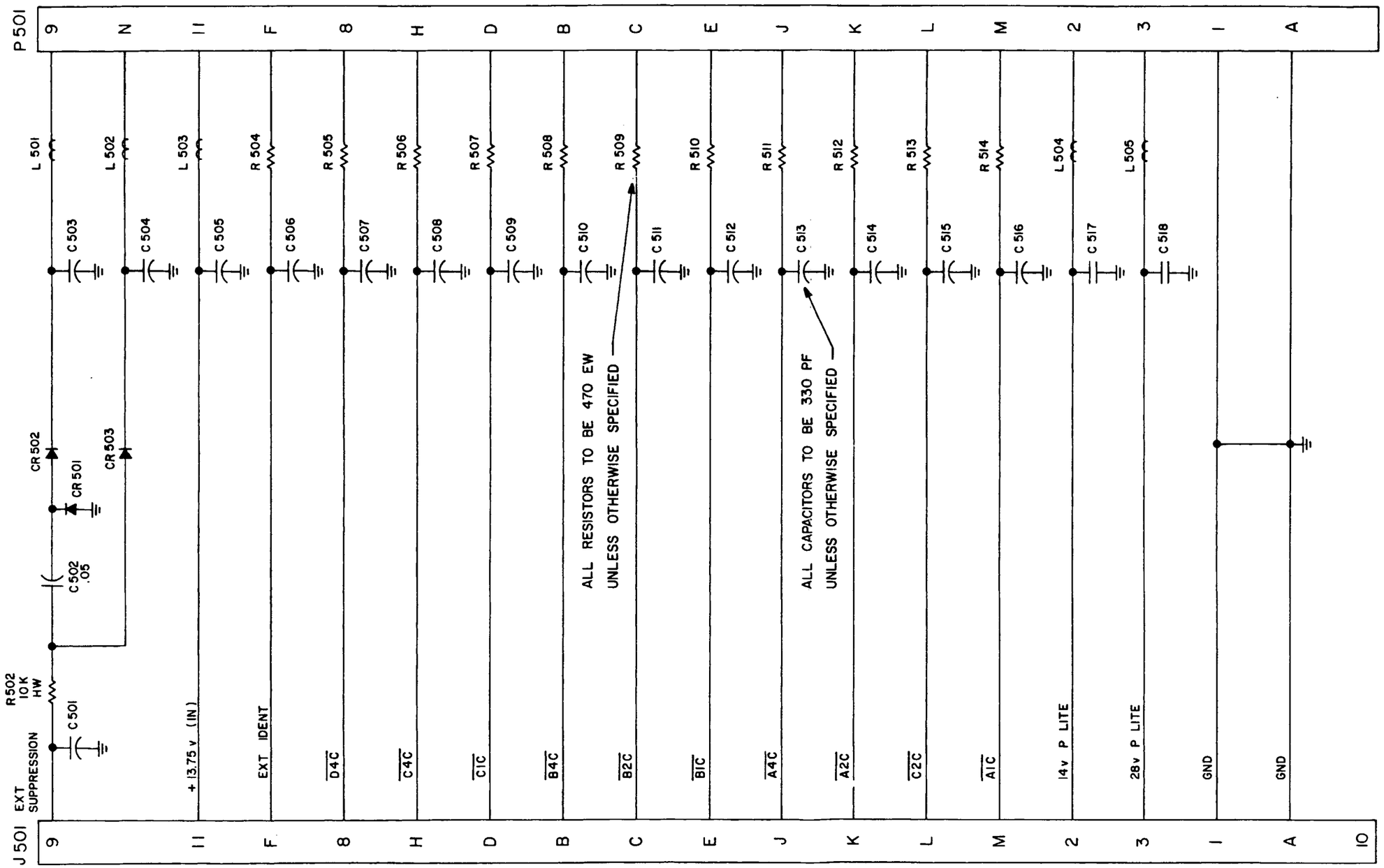


**FIGURE 6-32 KT 76A RFI Filter Board Schematic**
**(Dwg. No. 002-06203-0000 R-0)**

# APPENDIX 'A'

SEMICONDUCTOR AND INTEGRATED CIRCUIT DATA
TABLE OF CONTENTS

## 1.1 GENERAL

Due to the wide utilization of semiconductors in this electronic equipment, somewhat different techniques are necessary in maintenance prpcedures. In solid state circuits,the impedances and resistances encountered are of much lower values than those encountered in vacuum-tube circuits. Therefore, a few ohms discrepancy can greatly affect the performance of the equipment. Also, coupling and filter capacitors are of larger values and usually are of the tantalum type. Hence, when measuring values of capacitors, an instrument accurate in the high ranges must be employed. Capacitor polarity must be observed when measuring resistance. Usually,more accurate measurements can be obtained if the semiconductors are removed or disconnected from the circuit.

### 1.1.1 SEMICONDUCTOR TEST EQUIPMENT

Damage to semiconductors by test equipment is usually the result of accidentally applying too much current or voltage to the elements. Common causes of damage from test equipment are discussed in the following paragraphs.

(1) Transformerless Power Supplies. Test equipment with transformerless power supplies is one source of high current. However, this type of test equipment can be used by employing an isolation transformer in the AC power line.

(2) Line Filter. It is still possible to damage semiconductors from line current, even though the test equipment has a power transformer in the power supply, if the test equipment is provided with a line filter. This filter may function as a voltage divider and apply half voltage to the semiconductor. To eliminate this condition, connect a ground wire from the chassis of the test equipment to the chassis of the equipment under test before making any other connections.

(3) Low-Sensitivity Multimeters. Another cause of semiconductor damage is a multimeter that requires excessive current to provide adequate indications. Multimeters with sensitivities of less than 20,000 ohms-per-volt should not be used on semiconductors. When in doubt as to the amount of current supplied by a multimeter, check the multimeter connected in series with the multimeter leads. If more than one milliampere is drawn on any range, this range cannot be safely used on small semiconductors.

(4) Power Supply. When using a battery-type power supply, always use fresh batteries of the proper value. Make certain that the polarity of the power supply is correct for the equipment under test. Do not use power supplies having poor voltage regulation.

### 1.1.2 SEMICONDUCTOR VOLTAGE AND RESISTANCE MEASUREMENTS

When measuring voltage or resistance in circuits containing semiconductor devices, remember that these components are polarity and voltage conscious. Since the values of capacitors used in semiconductor circuits are usually large, time is required to charge these capacitors. Thus, any reading obtained is subject to error, if sufficient time is not allowed for the capacitor to fully charge. When in doubt, it may be best in some cases to isolate the components in question and measure them individually.

### 1.1.3 TESTING OF TRANSISTORS

A transistor checker should be used to properly evaluate transistors. If a transistor tester is not available, a good multimeter may be used. Make sure that the multimeter meets the requirements outline in the preceeding paragraph.

(1) PNP Transistor. To check a PNP transistor, connect the positive lead of the multimeter to the base of the transistor and the negative lead to the emitter. Generally, a resistance reading of 50,000 ohms or more should be obtained. Reconnect the multimeter with the negative lead to the base. With the positive lead connected to the emitter or collector a resistance value of 500 ohms or less should be obtained.

(2) NPN Transistor. Similar tests made on an NPN transistor should produce the following results:

With the negative lead of the multimeter connected to the base of the transistor,the value of resistance between the base and the collector or emitter should be high. With the positive lead of the multimeter connected to the base, the value of resistance between the base and the collector or emitter should be low. If these results are not obtained, the transistor is probably defective and should be replaced.

**CAUTION**

IF A TRANSISTOR IS FOUND TO BE DEFECTIVE, MAKE CERTAIN THAT THE CIRCUIT IS IN GOOD OPERATING ORDER BEFORE INSTALLING A REPLACEMENT TRANSISTOR. IF A SHORT CIRCUIT EXISTS IN THE CIRCUIT, PUTTING IN ANOTHER TRANSISTOR WILL MOST LIKELY RESULT IN BURNING OUT THE NEW COMPONENT. DO NOT DEPEND UPON FUSES TO PROTECT TRANSISTORS.

(3) Always check the value of the bias resistors in series with the various elements. A transistor is very sensitive to improper bias voltage; therefore, a short or open circuit in the bias resistance may damage the transistor.

1.1.4 REPLACING SEMICONDUCTORS

Never remove or replace a semiconductor with the supply voltage turned on. Transients thus produced may damage the semiconductor or others remaining in the circuit. If a semiconductor is to be evaluated in an external test circuit, be sure that no more voltage is applied to the semiconductor than normally is used in the circuit from which it came.

(1) Use only a low heat soldering iron when installing or removing soldered-in parts.

(2) When installing or removing a soldered-in semiconductor,grasp the lead to which heat is applied between the solder joint and the semiconductor with long nosed pliers. This will dissipate some of the heat that would otherwise conduct into the semiconductor from the soldering iron. Make certain that all wires soldered to semiconductor terminals have first been properly tinned so that the necessary connection can be made quickly. Excessive heat will permanently damage a semiconductor.

1.2 INTEGRATED CIRCUIT MAINTENANCE

1.2.1 GENERAL

A knowledge of integrated circuit fundamentals is as necessary in testing digital logic circuits involving I.C.'s as a knowledge of rectification fundamentals is needed to test a power supply.

1.2.2 TERMINOLOGY

Several terms are used whenever logic circuits are discussed:

(1) A logic state is defined as a high or low level voltage applied to the input or seen at the output of a device. A high level voltage is called a logic "1". A low level voltage is called a logic "0". Logic threshold voltage of a device is the input voltage required at an input to change the output state.

(2) A truth table is a list of input logic states that will yield certain output logic states. A digital logic element should be thought of as a circuit element with its output level being either HI or LO as programmed by the levels present on its inputs. A logic element may be tested by verifying that it is preforming per the Truth Table of the logic element.

(3) Logic elements which have multiple inputs and a single output are known as gates. The OR gate produces a HI output when one OR more of the inputs are HI. With all inputs LO, the output is LO. The AND gate produces a HI output only when all inputs are HI. When any input is LO the output is LO. A small circle at the output of a gate on the schematics indicates "negation", which means that the sense of the gate logic is reversed. An OR gate with negation is called a NOR gate and an AND gate with negation is called a NAND gate. A NOR gate produces a LO output when one or more of the inputs are HI and a NAND gate produces a LO output only when all inputs are HI.

(4) The Flip-Flop logic element is the basic data storage element of digital logic. It has two outputs that are always at opposite logic levels. That is, when one output is HI the other output is LO. The Flip-Flop will remain in a particular state until that state is changed by an input signal.

The operation of these Flip-Flops is controlled by the signals on their inputs and is best understood by a careful study of their Truth Tables. It should be kept in mind that the small circle on either the input or the output indicates negation. Also, a circle on a clock input indicates that a HI to LO transition causes the Flip-Flop to function.

(5) Besides the gates and Flip-Flops, two other commonly used logic elements are inverters and expanders. Inverters are merely switching transistors such that if a logic "1" is the input to a device, a logic "0" will be the output and vice versa. An expander is a set of parallel switching transistors that depends upon another resistor to provide their supply voltage. Generally, these devices are used to expand the number of inputs available to a standard gate.

(6) Basic gates, inverters, expanders and Flip-Flops are defined symbolically and functionally in Figures 1 through 7.

1.2.3 SPECIAL LOGIC CIRCUITS

A counter is used to provide one output pulse for every N input pulses. This means F (out) = F (in)/N. In a programmable counter N may be selected from any one of several choices. Programmable counters are divided into two classifications: reset counters and preset counters. The reset counter uses the principle that when the counter reaches a fixed load state, it sets to a selected preset state and recycles.

A typical oneshot is shown in Figure 8. When a high pulse is applied to an input this will cause the output to become low for a preset time and the opposite output to come high for a preset time. The preset time is determined by the circuit components associated with expanders.

An R-S (reset-set) Flip-Flop is also used in several instances and is made up of two NOR gates interconnected together. The interconnection diagram for the monostable Flip-Flop circuit is shown in Figure 7.

1.2.4 INTEGRATED CIRCUIT TEST EQUIPMENT

As with semiconductors, damage to integrated circuits by test equipment is usually the result of applying too much current or voltage to the elements. The same precautions as discussed in paragraph 1.1.1 apply here.

1.2.5 VOLTAGE MEASUREMENTS

Precise voltage measurements are not needed in testing digital I.C.'s other than to see that the voltage is a HI or LO level. An oscilloscope is needed where the input levels are of short duration, either HI or LO. For instance, if a 10 microsecond pulse going from LO to HI was applied to one input of a NOR gate, while the other input stayed LO, the output would go LO for 10 microseconds and then return HI. This, of course, could not be seen without an oscilloscope.

1.2.6 TESTING INTEGRATED CIRCUITS

The minimum high and maximum low levels on the digital logic elements are as follows:

| TTL | $V_{CC}$ = +5V |
|---|---|
| HIGH | LOW |
| +2.10V | +0.70V |

When checking input and output levels of a logic element under question, it should be remembered that an input or output may not agree with its truth table because some other component connected to the same point has shorted to ground or to the supply voltage ($V_{CC}$). This is not common when an output of one element is connected to an input of another. A majority of digital I.C. failures can be grouped into three categories.

1. Input(s) or output shorted to ground pin of I.C.
2. Input(s) or output shorted to $V_{CC}$ pin of I.C.
3. Open input(s) or output.

An input or output shorted to ground would be a constant LO and an input or output shorted to $V_{CC}$ would be a constant HI.

Other failures common in digital I.C.'s are:

1. Ground pin open.
2. $V_{CC}$ pin open.
3. Inputs shorted together.

1.2.7 REPLACING INTEGRATED CIRCUITS

If an I.C. is known to be defective, the easiest way to remove it is to cut off each of its pins, remove the case, and then unsolder the remaining pins from the integrated circuit card one by one. This method is preferrable to removing the I.C. intact because attempts to remove the I.C. intact may result in damage to the printed circuit board.

1.3 SPECIAL LSI CHIP INFORMATION

King Radio Company (KRC) large scale integrated circuit (LSI) devices are metal oxide semiconductor (MOS) and complementary metal oxide semiconductor (CMOS) designs that have a very high input impedance. This feature results in some device damage during handling. The most frequent causes of damage are static electricity, voltages picked up from measuring devices with large input capacitors, and ungrounded soldering iron tips. Less frequent causes are bent pins, chipped ceramic around pins, and cracked packages.

A LSI Puller Package (KPN 050-1671-00) that helps reduce device handling damage has been designed by King Radio. This package contains an extractor for 28 or 40 pin LSIs that provides excellent control when installing or removing the device. The extractor snaps securely over the ends of the LSI.

To install a LSI device with the extractor, all pins should be aligned with the socket holes. To remove a LSI device, the device should be pulled squarely from the socket and immediately inserted into a conductive foam pad that is part of the LSI Puller Package. Several of the conductive pads have been included in the package for added convenience. These pads may also be used for medium size integrated circuit (MSI) and CMOS devices. It is extremely important to keep all KRC LSI devices in a conductive foam pad when transporting from one location to another and to ground or discharge test equipment used to determine device parameters. Soldering iron tips and instrument probes should be grounded prior to making contact with a device terminal.

The primary function of the IC is to monitor a serial data line (pin 5) and decide if a pulse train on that line meets the requirements for a valid interrogation. The pulse train consists of either 2 or 3 pulses. These pulses and their timing characteristics are described in, FAA Document TSO-C74c.

Three decisions may be made about an incoming pulse stream: 1) The interrogation is invalid, 2) The interrogation may be valid, but the P2 pulse is present in the data stream, and 3) the interrogation is a valid mode A, or C interrogation. In case (1), the IC completely ignores the pulse(s) and is immediately ready for further interrogation. In case (2), the IC recognizes the side lobe suppression (SLS) requirement and makes no reply, as well as ignoring any input pulses for a period of 35 $\mu$ seconds. In case (3), the transponder IC will send a reply. If the interrogation is a mode A type, it will transmit the data on the Mode A data lines as a serial output bit stream. If the interrogation is a Mode C interrogation, and Pin 16 is low, it will send the data that is present on the Mode C data lines. If Pin 16 is high, then only the framing pulses F1 and F2 will be sent.

Characteristics of P1 and P3 for recognition are listed in Table I below.

| Mode | P1-P3 Time | Reply Type | Comments |
|---|---|---|---|
| SLS | 2us $\pm$ 150ns | No Reply | P2 is treated as if it were P3. |
| A | 8us $\pm$ 200ns | Mode A Data | |
| C | 21us $\pm$ 200ns | Mode C Data | C inputs are complemented. |

TABLE I

Secondary Functions

The IC contains several circuit blocks to perform auxiliary functions. These are explained briefly below, and timing relationships are detailed later in this document.

Special Pulse Identification (SPI)

The IC will latch a momentary LOW input on Pin 14 for a period of approximately 23 seconds. During this time, a pulse is added to the serial output stream (Pin 3) for all Mode A replies. Mode C is not affected in any way. Additionally, the ANNUNCIATE output (Pin 12) will go high for this period.

Power-On-Reset

Whenever power has been interrupted for more than 5 Microseconds, the IC will revert to its initialization sequence. This clears all internal registers and disables any replies. This period lasts approximately 47 seconds. After this time, the IC will be ready for its normal functions.

Reply Annunciate

As previously stated, the Annunciate Output (Pin 12) will be HIGH for 23 seconds after the Ident input has been taken LOW. If, however, Ident has not been taken LOW, the annunciate Output will go HIGH for 760 milliseconds every time the IC sends a reply. This will cause the panel lamp to blink as the ground station beam interrogates the unit. If Ident is taken LOW during this 760 millisecond period, the IC will go to the SPI mode and Pin 12 will remain HIGH for the 23 Second interval.

Description of Inputs LO = 0 to 1 volt HI = 8 to 9 volts

$\overline{\text{STBY}}$ (Pin 4) While HIGH, this input allows normal operation. When LOW, the IC ignores the Serial Input Line.

SER IN (Pin 5) This is the serial input line of the transponder IC. The pulses are Positive-going signals, normally at ground potential. Pulse widths must exceed 400 nanoseconds, but may be up to 1.5 uSec. The IC is sensitive to the leading edge of P3.

ESI (Pin 6) Must be High.

Ø and $\overline{\text{Ø}}$ (Pins 7 and 8) These are the clock and complemented clock inputs. They have a period of 362.6 nanoseconds.

A/$\overline{\text{B}}$ (Pins 9) This input must be high.

$\overline{\text{TEST}}$ (Pin 10) Must be high.

$\overline{\text{IDENT}}$ (Pin 14) The function of this pin has been described above.

D SUPP (Pin 16) Must be High.

$\overline{\text{ALT EN}}$ (Pin 17) When High, Modes C replies consist of framing pulses only.

Description of Outputs LO = 0 to .5 volt HI = 6 to 9 volts

SER OUT (Pin 3) This pin is the serial output Reply bit-stream. It is normally low, with reply pulses having width of approximately 360 nanoseconds and a pulse period of 1.45 uSeconds .

SYNC (Pin 11) This pin (Normally Low) is a narrow high pulse which is used to reset the external clock generator to its initial state. When reset, the clock generator must cause Ø (Pin 8) to go High, and $\overline{\text{Ø}}$ (Pin 7) to go Low. This output occurs only upon reception of a valid Mode A or Mode C interrogation and only if Pin 4 is such that a reply will occur.

ANNUN (Pin 12) Described above. Indicates either Ident or Reply Modes.

ESO (Pin 13) This output is a High pulse approximately 35uSec wide which occurs while a reply is being sent out.

DDEC (Pin 15) Must not be connected.

## 1.4 TYPICAL LOGIC CIRCUITS AND TRUTH TABLES

FIGURE 1. BUFFER


$Z = A$

| A | Z |
|---|---|
| 0 | 0 |
| 1 | 1 |

FIGURE 2. INVERTER


$Z = \overline{A}$

| A | Z |
|---|---|
| 0 | 1 |
| 1 | 0 |

FIGURE 3. NOR GATE


$Z = \overline{A+B+C}$

| A | B | C | Z |
|---|---|---|---|
| 0 | 0 | 0 | 1 |
| 1 | 0 | 0 | 0 |
| 0 | 1 | 0 | 0 |
| 0 | 0 | 1 | 0 |
| 1 | 1 | 0 | 0 |
| 1 | 0 | 1 | 0 |
| 0 | 1 | 1 | 0 |
| 1 | 1 | 1 | 0 |

FIGURE 4. NAND GATE


$Z = \overline{ABC}$

| A | B | C | Z |
|---|---|---|---|
| 0 | 0 | 0 | 1 |
| 1 | 0 | 0 | 1 |
| 0 | 1 | 0 | 1 |
| 0 | 0 | 1 | 1 |
| 1 | 1 | 0 | 1 |
| 1 | 0 | 1 | 1 |
| 0 | 1 | 1 | 1 |
| 1 | 1 | 1 | 0 |

FIGURE 5. EXCLUSIVE OR GATE


$Z = A \oplus B$

| A | B | Z |
|---|---|---|
| 0 | 0 | 0 |
| 1 | 0 | 1 |
| 0 | 1 | 1 |
| 1 | 1 | 0 |

FIGURE 6. TTL TO CMOS VOLTAGE LEVEL TRANSLATORS

BUFFER

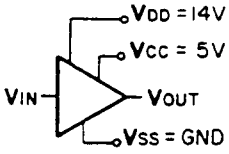


| | | |
|---|---|---|
| VIN | 0V | 14V |
| VOUT | 0V | 5V |

INVERTER

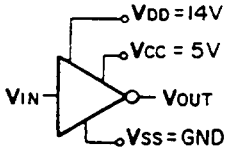


| | | |
|---|---|---|
| VIN | 0V | 14V |
| VOUT | 5V | 0V |

## 1.5 DATA SHEETS FOR INTEGRATED CIRCUITS

FIGURE 7. NOR GATE FLIP-FLOP

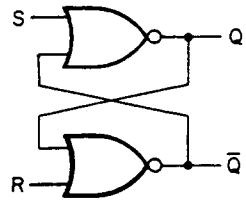


| S | R | Next Q | $\bar{Q}$ |
|---|---|---|---|
| 1 | 1 | 0 | 0 |
| 0 | 1 | 1 | 0 |
| 0 | 0 | NC | NC |
| 1 | 0 | 0 | 1 |

NC = NO CHANGE

FIGURE 8. MONOSTABLE MULTIVIBRATOR (ONE-SHOT)

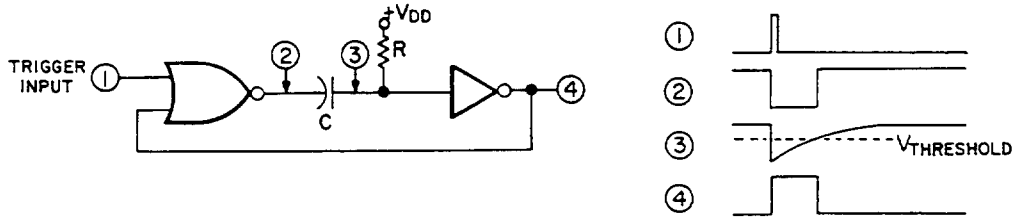


FIGURE 9. ASTABLE MULTIVIBRATOR (FREE-RUNNING)

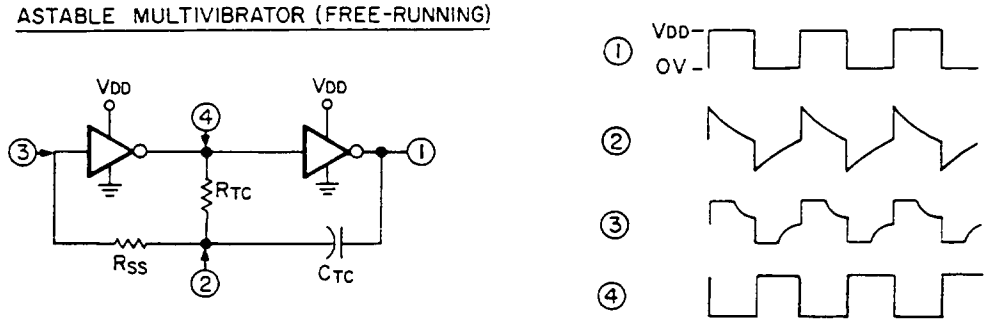


FREQUENCY OF OPERATION IS DETERMINED BY $R_{TC}$ AND $C_{TC}$. A NOR OR NAND GATE MAY BE USED IN PLACE OF THE FIRST INVERTER TO PERMIT GATING OF THE MULTIVIBRATOR.

FIGURE 10. DIFFERENTIATOR


OFTEN USED TO CHANGE A STEP SIGNAL TO A SHORT PULSE SIGNAL.

## 9316 4-BIT BINARY COUNTER

9316 is a High Speed Synchronous 4-Bit Binary Counter. Synchronously presetable,multifunctional MSI building blocks useful in a large number of counting,digital intergration and conversion applications. Several stages of synchronous operation are obtainable with no external gating packages required through an internal carry lookahead counting technique.

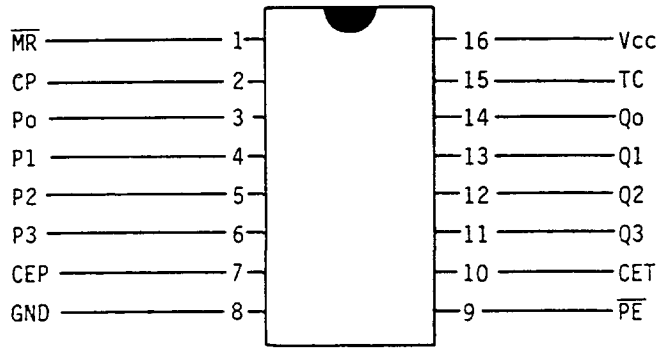


## 7416 HEX INVERTER BUFFER/DRIVER

These TTL/SSI hex inverter buffer/drivers feature high voltage open collector output for interfacing with high level circuits (such as MOS),or for driving high current loads (such as lamps or relays) and are also characterized for use as inverter buffers for driving TTL inputs.

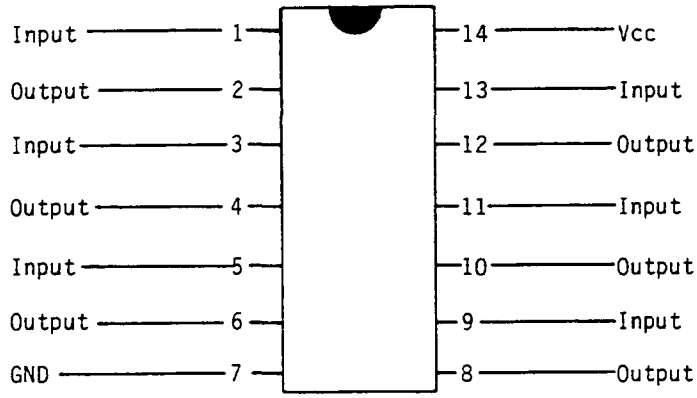

## 74121 MONOSTABLE MULTIVIBRATOR

The 74121 is a TTL Monostable Multivibrator with DC triggering from positive or gated negative going inputs and with inhibit facility. Both positive and negative going output pulses are provided with full fan out to 10 normalized loads.

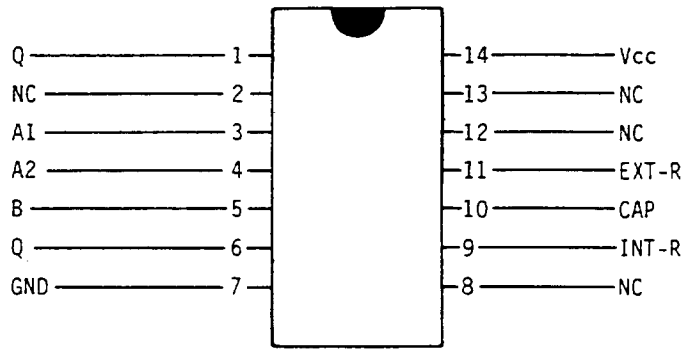


## uA 710 HIGH SPEED DIFFERENTIAL COMPARATOR

The uA710 is a Differential Comparator intended for applications requiring high accuracy and fast response times. The device is useful as a variable threshold Schmitt Trigger,a pulse height discriminator, voltage comparator in a high speed A/D convertor,a memory sense amplifier or a high noise immunity line receiver.

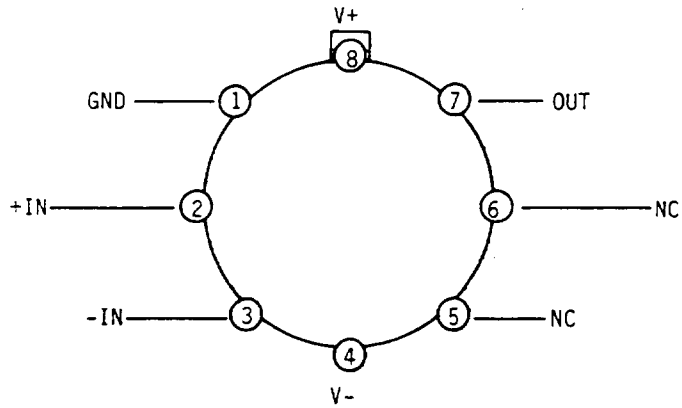

## KPN 120-8005-00 KING LSI TRANSPONDER CHIP

The King Radio Custom Transponder LSI is an integrated circuit which performs many of the logic and timing functions of a complete transponder unit. It decodes a serial input bit-stream and, if the interrogation is valid, sends an output bit-stream corresponding to either transponder code or encoded altimeter data. Initial reset of approximately 45 seconds allows the remainder of the transponder unit to become ready after power-on. Many selections of modes may be made with appropriate connections to input pins. The device requires a 2-phase crystal-controlled clock of 2.78562MHz and a nominal +9 Volt power supply. Technology is P-Channel Ion-Implant MOS. All inputs and outputs are static-discharge protected. No inputs may be left floating.